RKV 1000, 1100

Mounting frame

- Casing material: Galvanized steel

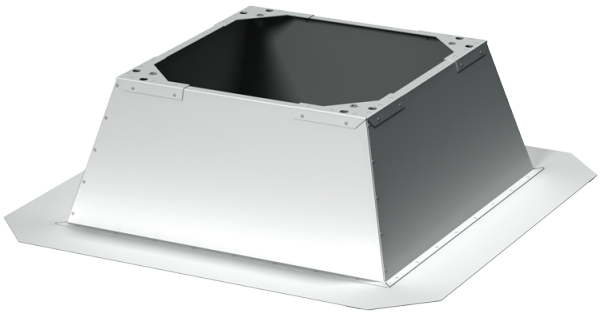

	Unit of measurement	RKV 1000, 1100
Weight	kg	103.7

Dimensions

B	B1	H	L	L1
1712	1352	730	1412	1240

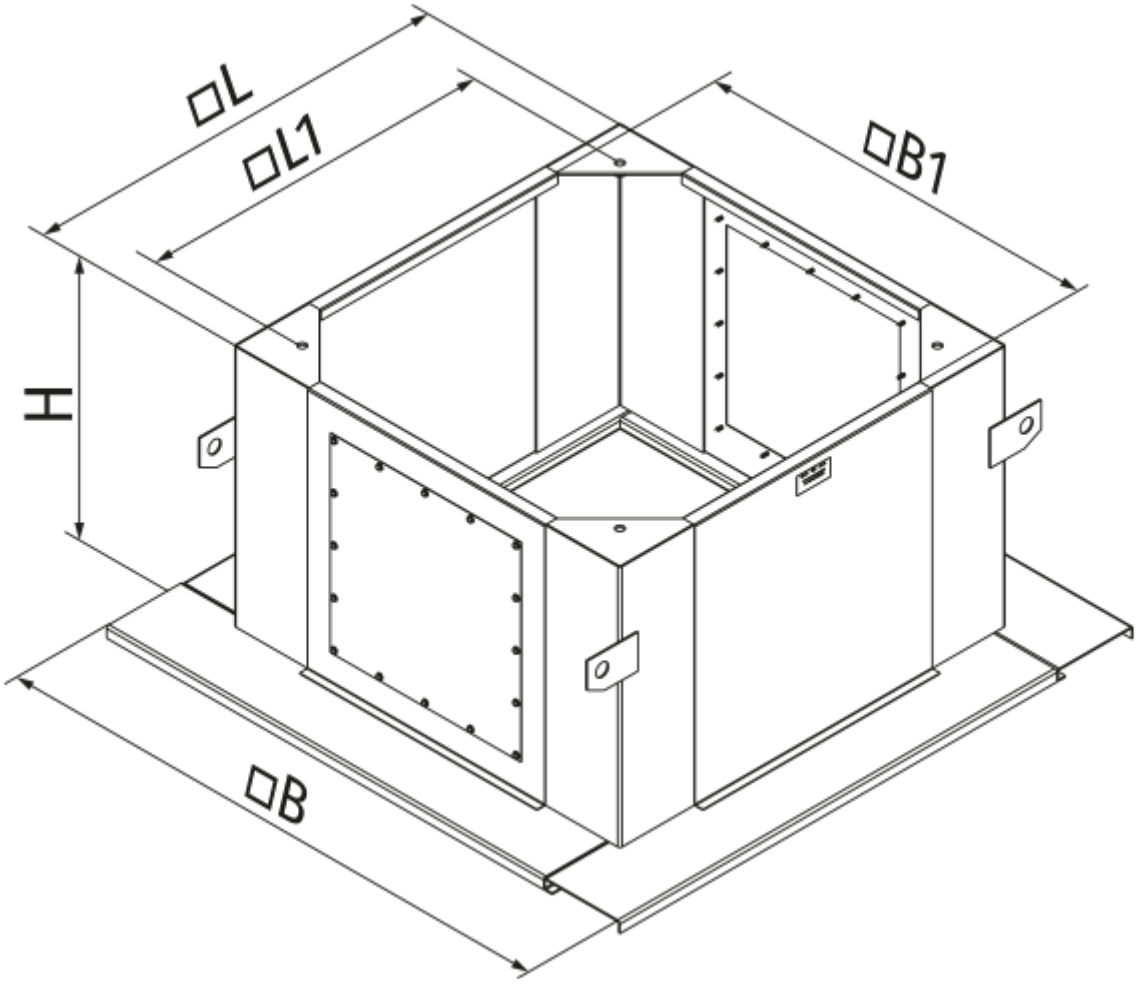
□L
□L1
□B1
H
□B