Quietline 100 T Duo

Extra quiet axial inline fans

- Sound pressure level LpA at 3 m: 25
- Casing material: Plastic
- Backdraft protection: Backdraft damper
- Timer: Turn off timer
- Ball bearing



	Unit of measurement	Quietline 100 T Duo	
Speed	-	1	2
Connected air duct size	mm	100	
Phases	-	1	
Minimum supply voltage	V	220	
Maximum supply voltage	V	240	
Power supply frequency	Hz	50	
Rated power	W	4.5	7.5
Unit current	A	0.029	0.049
Maximum airflow	m^3/h	75	100
Rotation speed at 50hz	-	1650	2100
Sound pressure level LpA at 3 m	dB(A)	22	25
Weight	kg	0.61	
Ambient air temperature max	°C	40	
Ambient air temperature min	°C	1	
Ingress protection rating	-	IPX4	
Impeller material	-	Plastic	

Dimensions

L	ØD	k
137.5	99	-

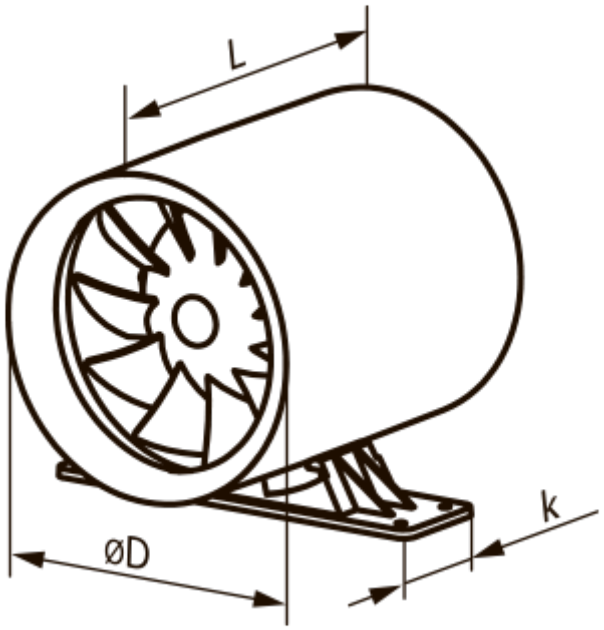

Accessories

Plastic

Name	Photo	Description
MV 100 V		Two-piece plastic grilles with angled louvers

Fittings

Name	Photo	Description
PVT 050/10		The adhesive PVC tape is an insulation tape made of plasticized PVC base covered with a glue layer
PVT 050/30		The adhesive PVC tape is an insulation tape made of plasticized PVC base covered with a glue layer
PVT 050/50		The adhesive PVC tape is an insulation tape made of plasticized PVC base covered with a glue layer
C 100		The clamps are designed for quick and reliable mounting and connection of various round ventilation system components. Clamps are made of stainless steel band

Flat duct

Name	Photo	Description

1805		Wall mounting

Flexible ducts

Name	Photo	Description
Polyvent N		Flexible uninsulated air duct made of metallized film

Backdraft dampers

Name	Photo	Description
KO 100		Back valve is designed for domestic fan
KO1 100		Back valve is designed for domestic fan

Window vents

Name	Photo	Description
PO 400		Window ventilators for supply ventilation

Metal

Name	Photo	Description
MVM 102 V N		Exhaust metal hoods

Ecodesign

Trademark	Vents					
Model	Quietline 100 T Duo					
Specific energy consumption (SEC) (kWh/(m²/a))	Cold		Average		Warm	
	-34.9	A	-17	E	-6.7	F
Type of ventilation unit	Unidirectional					
Type of drive installed	2-speed					
Type of heat recovery system	None					
Maximum flow rate (m³/h)	100					
Electric power input (W)	7.5					
Reference flow rate (m³/s)	0.021					
Specific power input (SPI) (W/(m³/h))	0.06					
Control typology	Clock control					
Maximum external leakage rates (%)	2.7					
Sound power level (dB(A))	42					
Declared typology	RVU UVU					
The annual electricity consumption (AEC) (kWh/a)	Cold		Average		Warm	
	71		71		71	
The annual heating saved (AHS) (kWh/a)	Cold		Average		Warm	
	3667		1874		848	