Quiet-Style 100 DC



Updated version of low-noise axial fans with DC motors

- Sound pressure level LpA at 3 m: 26
- Impeller type: Mixed-flow
- Casing material: Plastic
- Backdraft protection: Backdraft damper
- Ball bearing

	Unit of measurement	Quiet-Style 100 DC	
Speed	-	1	2
Connected air duct size	mm	100	
Maximum supply voltage	V	240	
Minimum supply voltage	V	220	
Power supply frequency	Hz	50/60	
Rated power	W	1.5	2.7
Unit current	A	0.03	0.04
Maximum airflow	m^3/h	58	93
Rotation speed at 50hz	-	1850	2650
Sound pressure level LpA at 3 m	dB(A)	21	26
Weight	kg	0.66	
Ingress protection rating	-	IP45	
Impeller material	-	Plastic	

Dimensions

ØD	B	L	L1
99	200	130	49

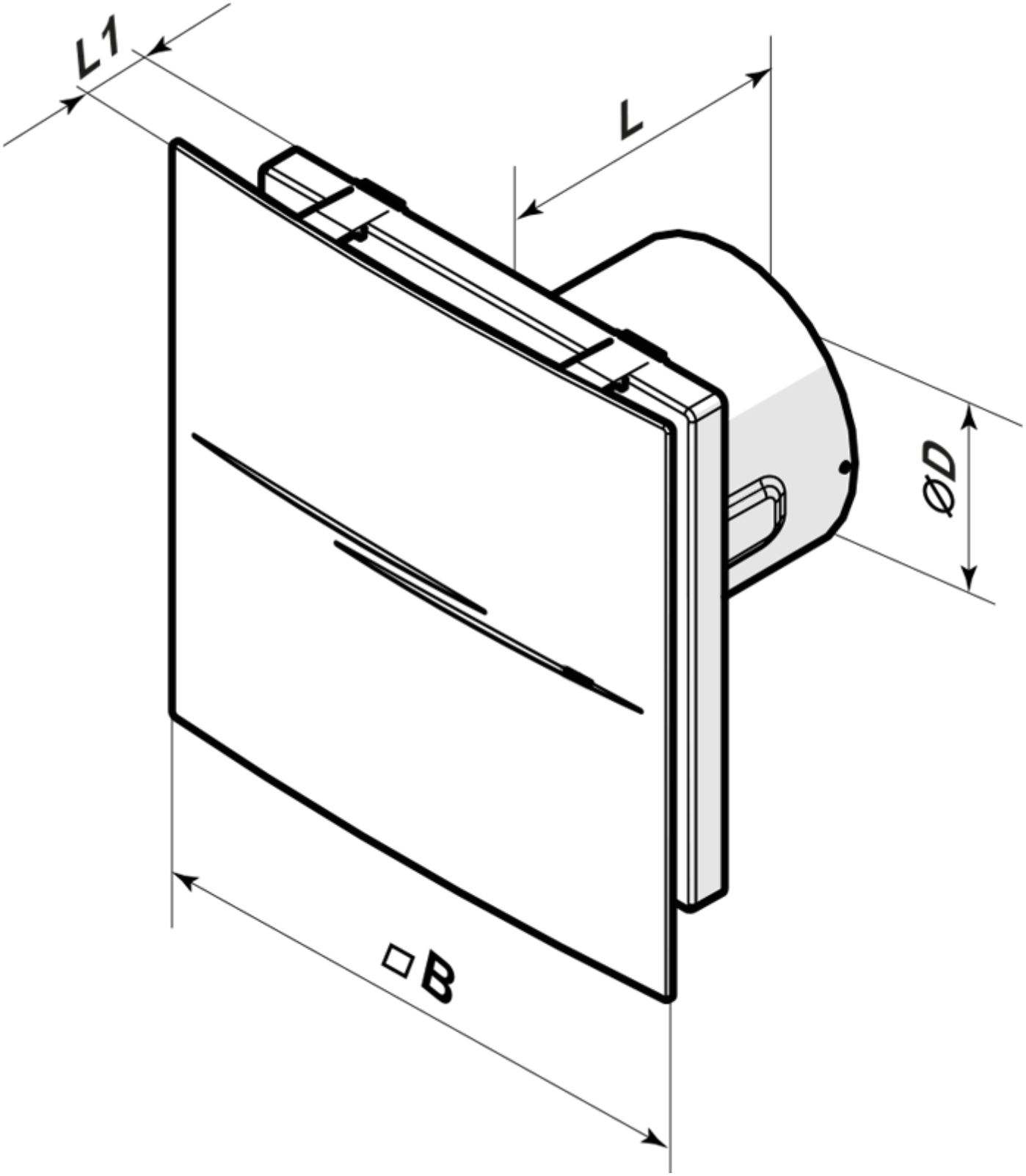

Accessories

Plastic

Name	Photo	Description

MV 100 V		Two-piece plastic grilles with angled louvers

Fittings

Name	Photo	Description
PVT 050/10		The adhesive PVC tape is an insulation tape made of plasticized PVC base covered with a glue layer
PVT 050/30		The adhesive PVC tape is an insulation tape made of plasticized PVC base covered with a glue layer
PVT 050/50		The adhesive PVC tape is an insulation tape made of plasticized PVC base covered with a glue layer
C 100		The clamps are designed for quick and reliable mounting and connection of various round ventilation system components. Clamps are made of stainless steel band

Flat duct

Name	Photo	Description
1805		Wall mounting

Flexible ducts

Name	Photo	Description
Polyvent N		Flexible uninsulated air duct made of metallized film

Backdraft dampers

Name	Photo	Description
KO 100		Back valve is designed for domestic fan
KO1 100		Back valve is designed for domestic fan

Window vents

Name	Photo	Description

PO 400		Window ventilators for supply ventilation

Plastic

Name	Photo	Description
MV 102 VK		Supply and exhaust hoods

Metal

Name	Photo	Description
MVM 102 V N		Exhaust metal hoods

Ecodesign

Trademark	Vents					
Model	Quiet-Style 100 DC					
Specific energy consumption (SEC) (kWh/(m²/a))	Cold		Average		Warm	
	-32.9	B	-16.5	E	-7.1	F
Type of ventilation unit	Unidirectional					
Type of drive installed	2-speed					
Type of heat recovery system	None					
Maximum flow rate (m³/h)	101					
Electric power input (W)	3.5					
Reference flow rate (m³/s)	0.019					
Specific power input (SPI) (W/(m³/h))	0.021					
Control typology	Manual control					
Maximum external leakage rates (%)	2.7					
Declared typology	RVU UVU					
Sound power level (dB(A))	47					
The annual electricity consumption (AEC) (kWh/a)	Cold		Average		Warm	
	27		27		27	
The annual heating saved (AHS) (kWh/a)	Cold		Average		Warm	
	3355		1715		776	