Quiet-Style 100 A



Extra quiet axial extract decorative fans

- Sound pressure level LpA at 3 m: 26
- Casing material: Plastic
- Backdraft protection: Backdraft damper
- Ball bearing

	Unit of measurement	Quiet-Style 100 A
Connected air duct size	mm	100
Phases	-	1
Maximum supply voltage	V	240
Minimum supply voltage	V	220
Power supply frequency	Hz	50
Rated power	W	7.5
Unit current	A	0.05
Maximum airflow	m^3/h	90
Rotation speed at 50hz	-	2165
Sound pressure level LpA at 3 m	dB(A)	26
Weight	kg	0.66
Ambient air temperature max	°C	40
Ambient air temperature min	°C	1
Ingress protection rating	-	IP45
Impeller material	-	Plastic

Dimensions

ØD	B	L	L1
99	200	130	49

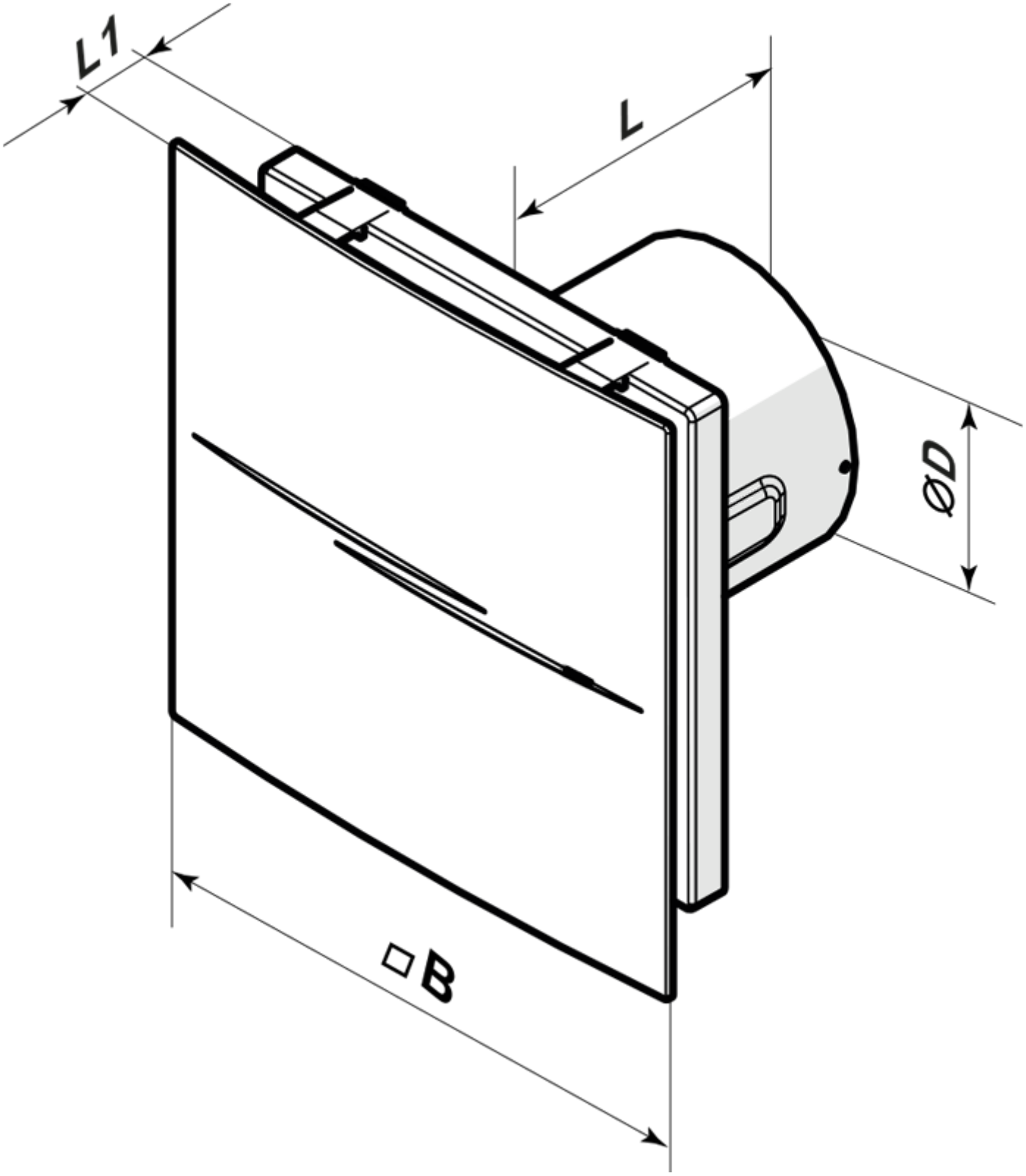

Ecodesign

Trademark	Vents					
Model	Quiet-Style 100 A					
Specific energy consumption (SEC) (kWh/(m²/a))	Cold		Average		Warm	
	-30.9	B	-14.5	E	-5.1	F
Type of ventilation unit	Unidirectional					
Type of drive installed	Single speed					
Type of heat recovery system	None					
Maximum flow rate (m³/h)	90					
Electric power input (W)	7.5					
Reference flow rate (m³/s)	0.018					
Specific power input (SPI) (W/(m³/h))	0.083					
Control typology	Manual control					
Maximum external leakage rates (%)	2.7					
Sound power level (dB(A))	46					
Declared typology	RVU UVU					
The annual electricity consumption (AEC) (kWh/a)	Cold		Average		Warm	
	104		104		104	
The annual heating saved (AHS) (kWh/a)	Cold		Average		Warm	
	3355		1715		776	