Quiet-dMEV 100 DC VT



Updated version of low-noise axial fans with DC motors

- Sound pressure level LpA at 3 m: 21
- Impeller type: Mixed-flow
- Casing material: Plastic
- Short spigot
- Backdraft protection: Backdraft damper
- Pull cord
- Timer: Turn off timer
- Ball bearing

	Unit of measurement	Quiet-dMEV 100 DC VT				
Speed	-	1	2	3	4	5
Connected air duct size	mm	100				
Minimum supply voltage	V	220				
Maximum supply voltage	V	240				
Power supply frequency	Hz	50/60				
Rated power	W	0.7	0.9	1.7	2.1	3.4
Unit current	A	0.014	0.017	0.024	0.028	0.039
Maximum airflow	m³/h	22	29	47	54	83
Sound pressure level LpA at 3 m	dB(A)	10	11	13	14	21
Ambient air temperature min	°C	1				
Ambient air temperature max	°C	45				
Ingress protection rating	-	IP45				
Impeller material	-	Plastic				

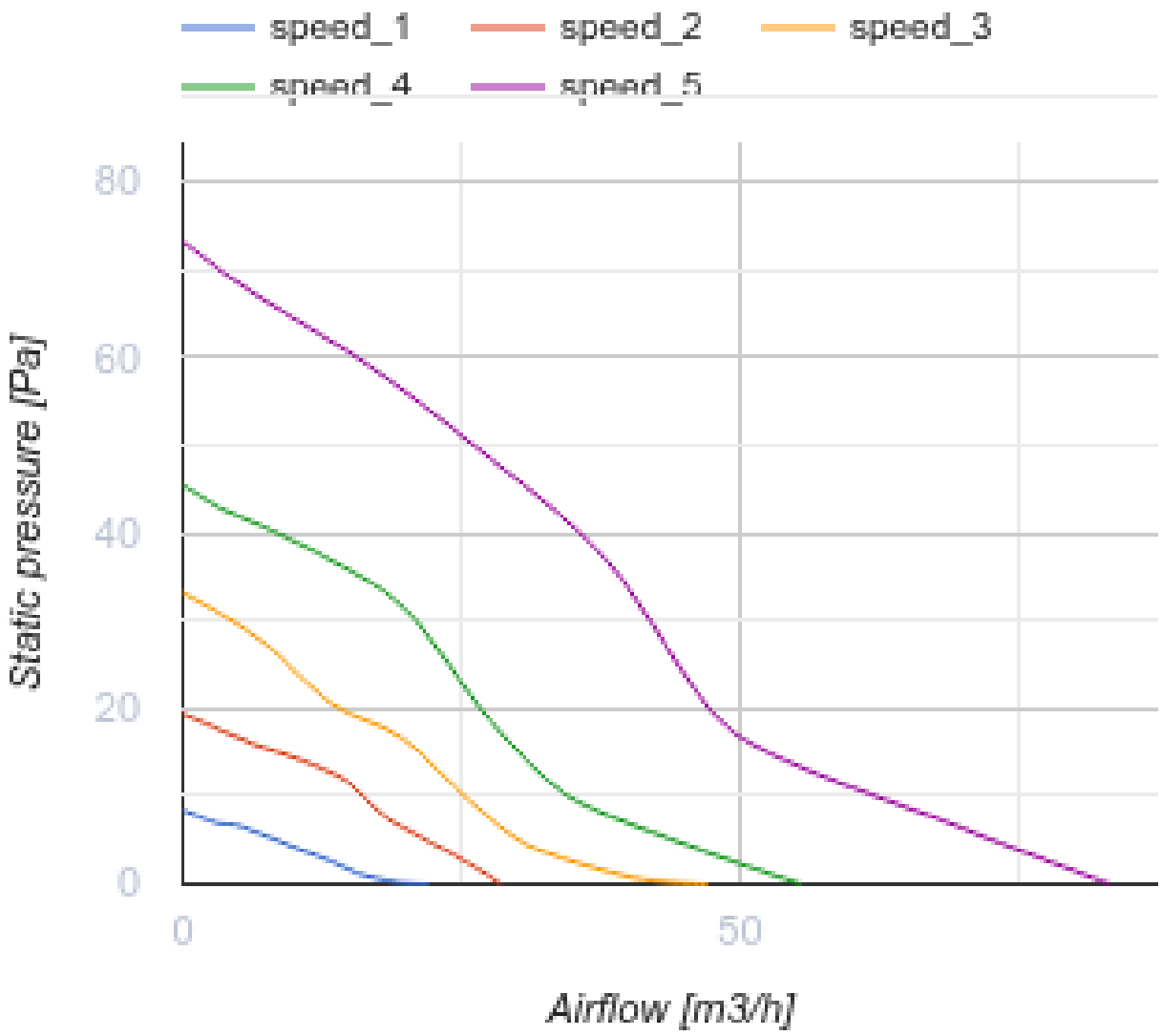

Dimensions

Ø D	B	L	L1
99	158	81	26

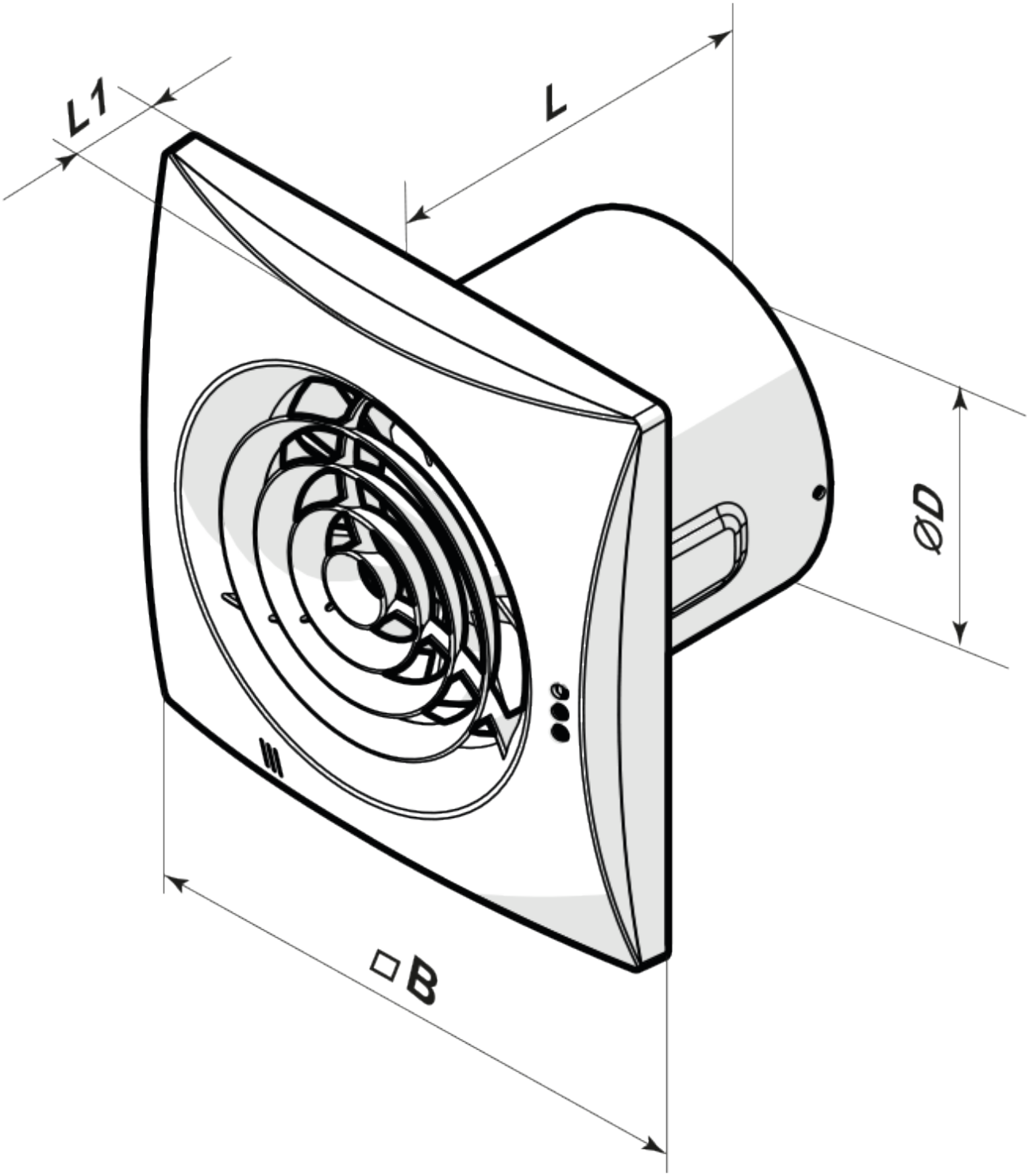
L1
L
ØD
□B

Ecodesign

Trademark	Vents					
Model	Quiet-dMEV 100 DC VT					
Specific energy consumption (SEC) (kWh/(m²/a))	Cold		Average		Warm	
	-35.6	A	-17.6	E	-7.4	F
Type of ventilation unit	Unidirectional					
Type of drive installed	Variable speed					
Maximum flow rate (m³/h)	83					
Electric power input (W)	3.4					
Reference flow rate (m³/s)	0.015					
Specific power input (SPI) (W/(m³/h))	0.039					
Control typology	Clock control					
Maximum external leakage rates (%)	2.7					
Declared typology	RVU UVU					
Sound power level (dB(A))	34					
The annual electricity consumption (AEC) (kWh/a)	Cold		Average		Warm	
	44		44		44	
The annual heating saved (AHS) (kWh/a)	Cold		Average		Warm	
	3667		1874		848	