Quiet 125 Duo V



Extra quiet axial extract fans

- Sound pressure level LpA at 3 m: 32
- Casing material: Plastic
- Backdraft protection: Backdraft damper
- Pull cord
- Ball bearing

	Unit of measurement	Quiet 125 Duo V	
Speed	-	1	2
Connected air duct size	mm	125	
Maximum supply voltage	V	240	
Minimum supply voltage	V	220	
Power supply frequency	Hz	50	
Rated power	W	9.5	13.5
Unit current	A	0.065	0.09
Maximum airflow	m³/h	145	170
Sound pressure level LpA at 3 m	dB(A)	28	32
Weight	kg	0.78	
Ambient air temperature min	°C	1	
Ambient air temperature max	°C	45	
Ingress protection rating	-	IP45	
Impeller material	-	Plastic	

Dimensions

ØD	B	H	L	L1
123.5	182	158	91	27

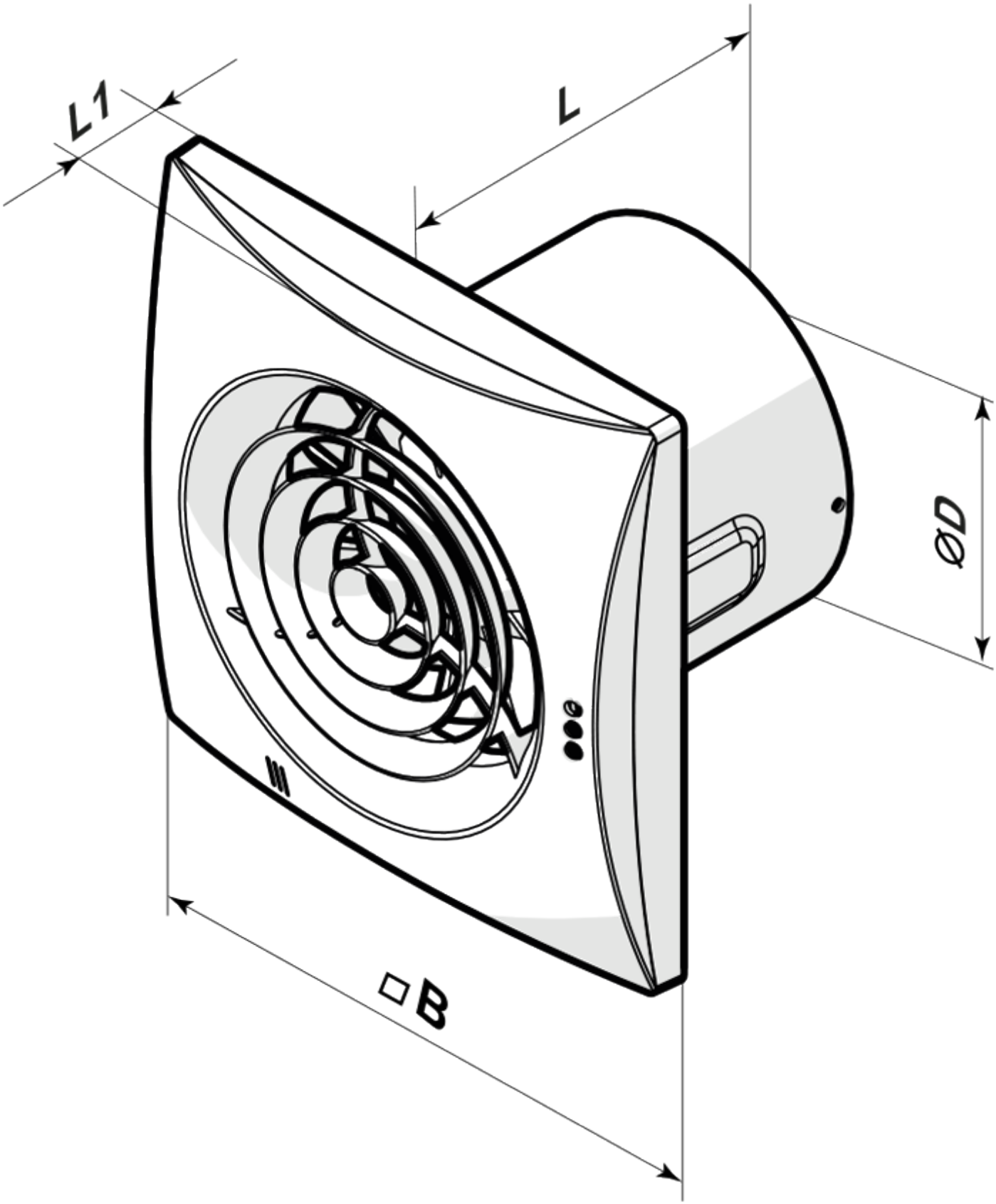
L1
L
ØD
□B

Ecodesign

Trademark	Vents					
Model	Quiet 125 Duo V					
Specific energy consumption (SEC) (kWh/(m²/a))	Cold		Average		Warm	
	-31.5	B	-15.1	E	-5.7	F
Type of ventilation unit	Unidirectional					
Type of drive installed	2-speed					
Type of heat recovery system	None					
Maximum flow rate (m³/h)	170					
Electric power input (W)	13.5					
Reference flow rate (m³/s)	0.04					
Specific power input (SPI) (W/(m³/h))	0.066					
Control typology	Manual control					
Maximum external leakage rates (%)	2.7					
Sound power level (dB(A))	48					
Declared typology	RVU UVU					
The annual electricity consumption (AEC) (kWh/a)	Cold		Average		Warm	
	82		82		82	
The annual heating saved (AHS) (kWh/a)	Cold		Average		Warm	
	3355		1715		776	