Quiet 100 black



Extra quiet axial extract fans

- Sound pressure level LpA at 3 m: 25
- Casing material: Plastic
- Backdraft protection: Backdraft damper
- Ball bearing

	Unit of measurement	Quiet 100 black
Connected air duct size	mm	100
Phases	-	1
Maximum supply voltage	V	240
Minimum supply voltage	V	220
Power supply frequency	Hz	50
Rated power	W	7.5
Unit current	A	0.049
Maximum airflow	m^3/h	97
Rotation speed at 50hz	-	2165
Sound pressure level LpA at 3 m	dB(A)	25
Weight	kg	0.55
Ambient air temperature max	°C	40
Ambient air temperature min	°C	1
Ingress protection rating	-	IP45
Impeller material	-	Plastic

Dimensions

ØD	B	H	L	L1
99	158	136	81	26

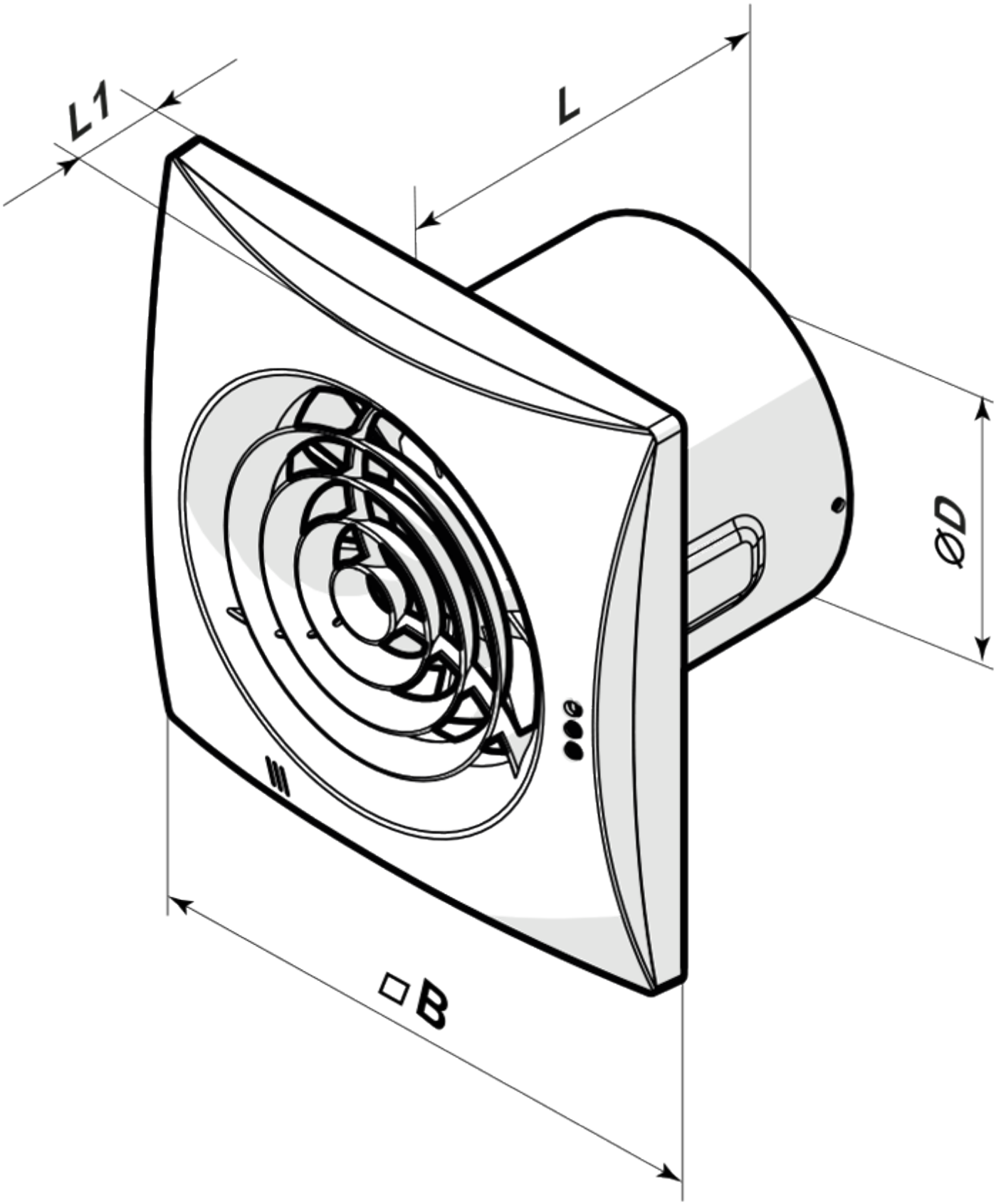

Ecodesign

Trademark	Vents					
Model	Quiet 100 black					
Specific energy consumption (SEC) (kWh/(m²/a))	Cold		Average		Warm	
	-31.1	B	-14.7	E	-5.3	F
Type of ventilation unit	Unidirectional					
Type of drive installed	Single speed					
Type of heat recovery system	None					
Maximum flow rate (m³/h)	97					
Electric power input (W)	7.5					
Reference flow rate (m³/s)	0.019					
Specific power input (SPI) (W/(m³/h))	0.077					
Control typology	Manual control					
Maximum external leakage rates (%)	2.7					
Sound power level (dB(A))	45					
Declared typology	RVU UVU					
The annual electricity consumption (AEC) (kWh/a)	Cold		Average		Warm	
	97		97		97	
The annual heating saved (AHS) (kWh/a)	Cold		Average		Warm	
	3355		1715		776	