Quiet 100 12



Extra quiet axial extract fans

- Sound pressure level LpA at 3 m: 25
- Casing material: Plastic
- Backdraft protection: Backdraft damper
- Ball bearing

	Unit of measurement	Quiet 100 12
Connected air duct size	mm	100
Phases	-	1
Minimum supply voltage	V	12
Maximum supply voltage	V	12
Power supply frequency	Hz	50
Rated power	W	8.5
Unit current	A	1.03
Maximum airflow	m^3/h	97
Rotation speed at 50hz	-	2165
Sound pressure level LpA at 3 m	dB(A)	25
Weight	kg	0.55
Ambient air temperature min	°C	1
Ambient air temperature max	°C	40
Ingress protection rating	-	IP45
Impeller material	-	Plastic

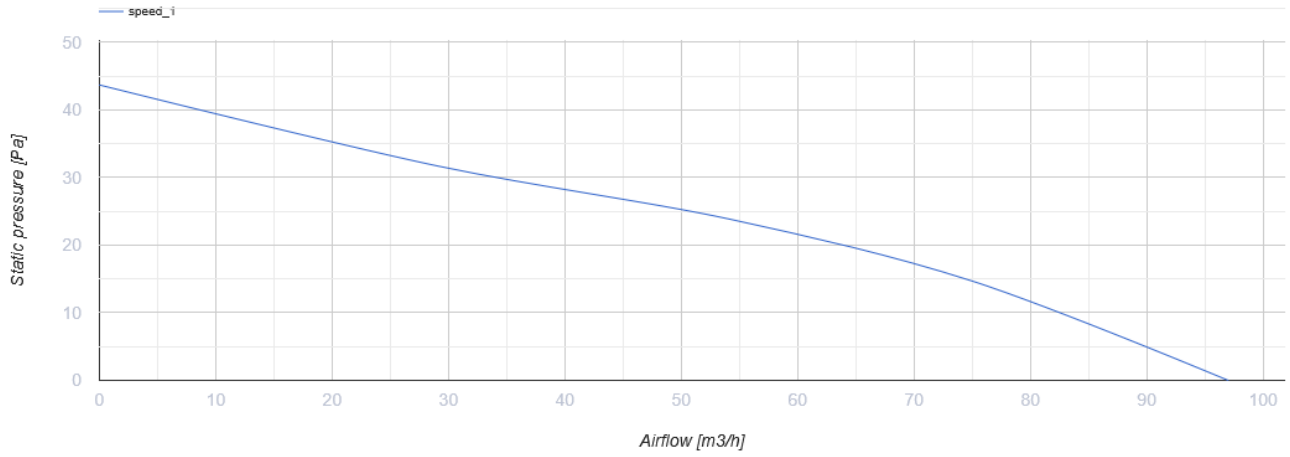

Dimensions

ØD	B	H	L	L1
99	158	136	81	26

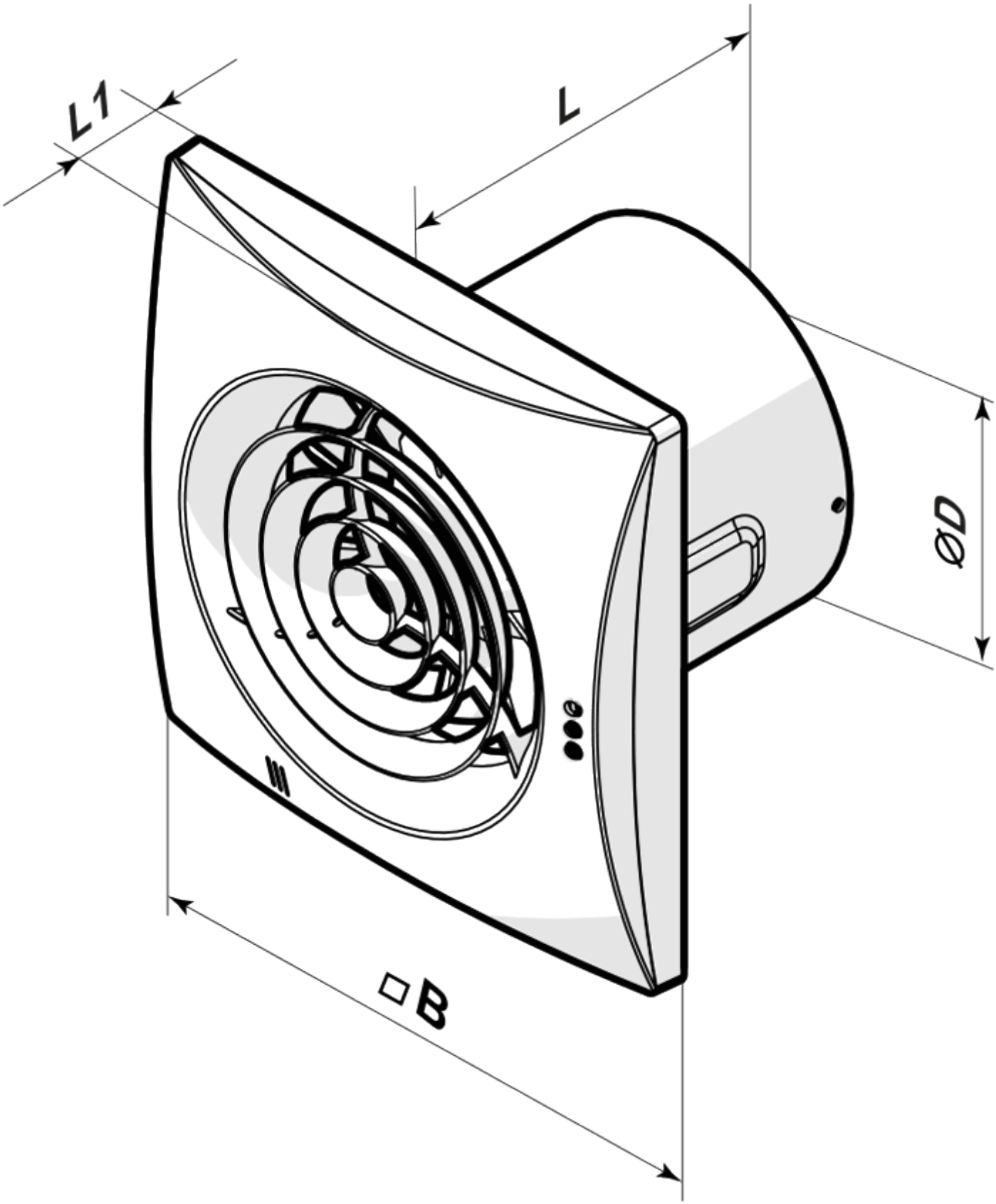
L1
L
ØD
□B