PR 600x350

Cross-flow plate heat exchangers for rectangular air ducts

• Casing material: Galvanized steel

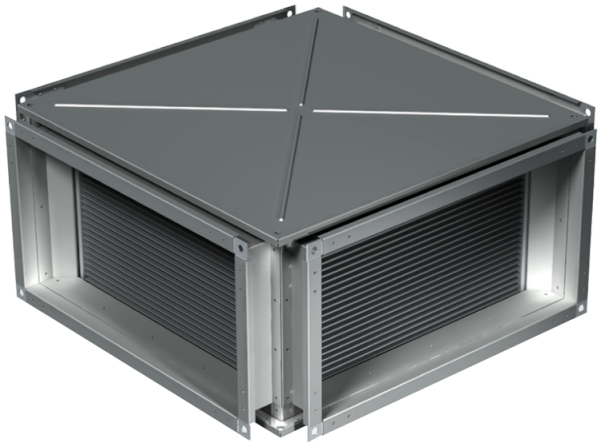

	Unit of measurement	PR 600x350
Weight	kg	33.4

Dimensions

B	B1	B2	H	H1	H2	H3	L
600	620	640	350	370	390	425	730

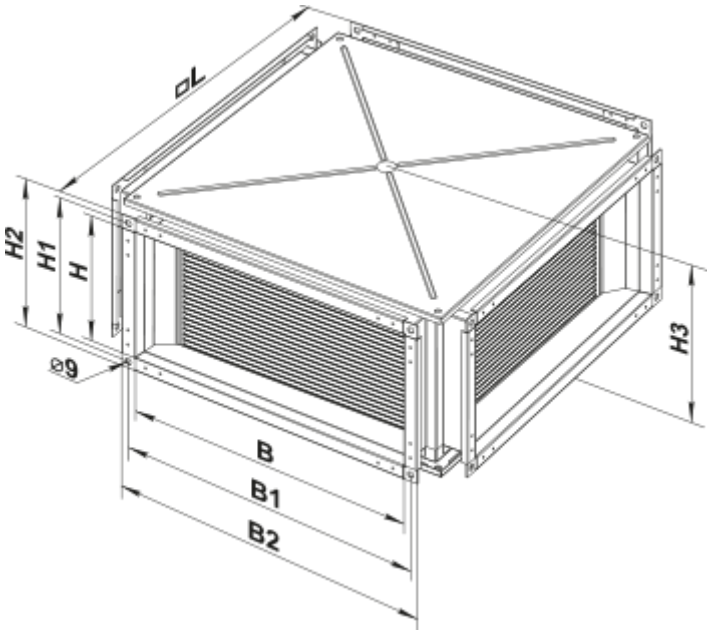
OL
H2
H1
H
H3
⌀9
B
B1
B2