PR 500x250

Cross-flow plate heat exchangers for rectangular air ducts

• Casing material: Galvanized steel

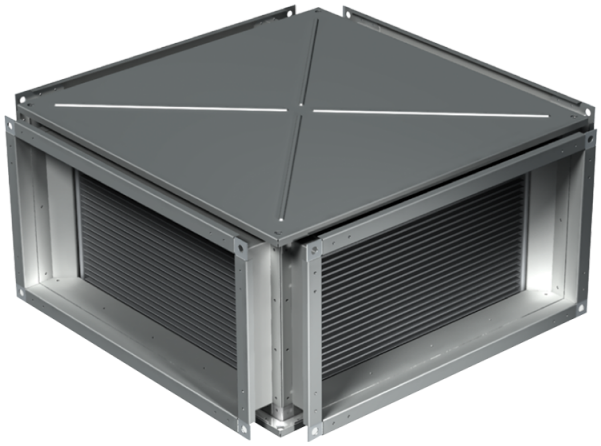

	Unit of measurement	PR 500x250
Weight	kg	22.6

Dimensions

B	B1	B2	H	H1	H2	H3	L
500	520	540	250	270	290	325	630

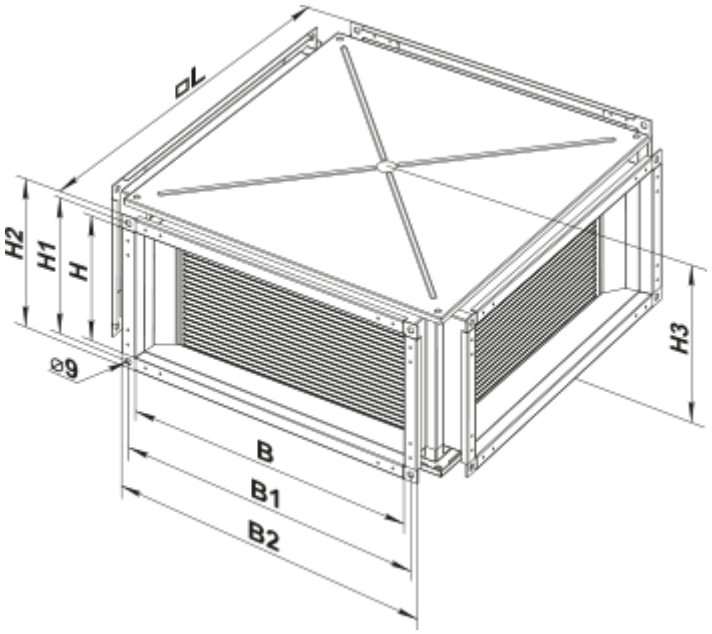
OL
H2
H1
H
H3
⌀9
B
B1
B2