PR 400x200

Cross-flow plate heat exchangers for rectangular air ducts

• Casing material: Galvanized steel

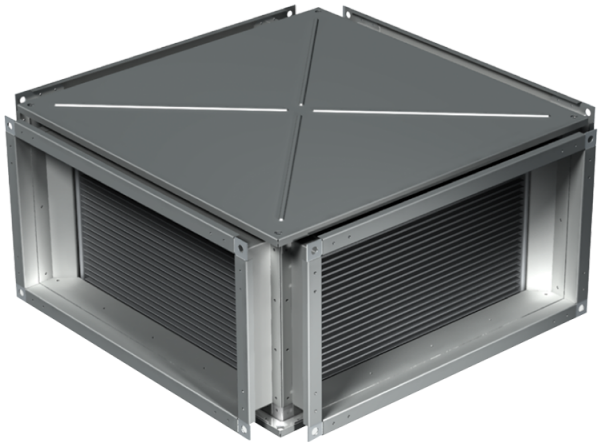

	Unit of measurement	PR 400x200
Weight	kg	17.1

Dimensions

B	B1	B2	H	H1	H2	H3	L
400	420	440	200	220	240	275	530

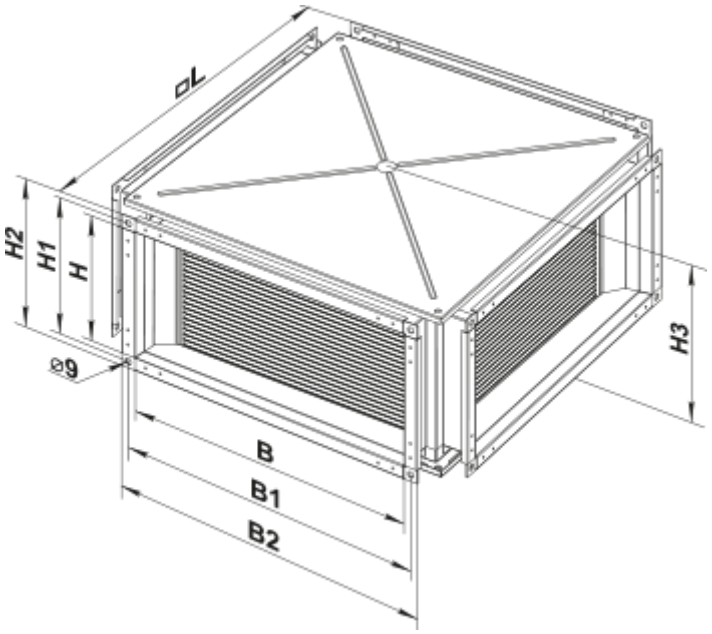
OL
H2
H1
H
H3
⌀9
B
B1
B2