OVP 4E 350



Inline axial fans

- Sound pressure level LpA at 3 m: 62
- Impeller type: Axial
- Casing material: Coated steel
- Installation in any position

	Unit of measurement	OVP 4E 350
Connected air duct size	mm	350
Phases	-	1
Minimum supply voltage	V	220
Maximum supply voltage	V	240
Power supply frequency	Hz	50/60
Rated power	W	140
Unit current	A	0.65
Maximum airflow	m³/h	2500
Rotation speed at 50hz	-	1380
Sound pressure level LpA at 3 m	dB(A)	62
Weight	kg	8.4
Transported air temperature (max)	°C	60
Transported air temperature (min)	°C	-30
Ingress protection rating	-	IPX4
Ingress protection rating of the drive	-	IP44
Impeller material	-	Coated steel

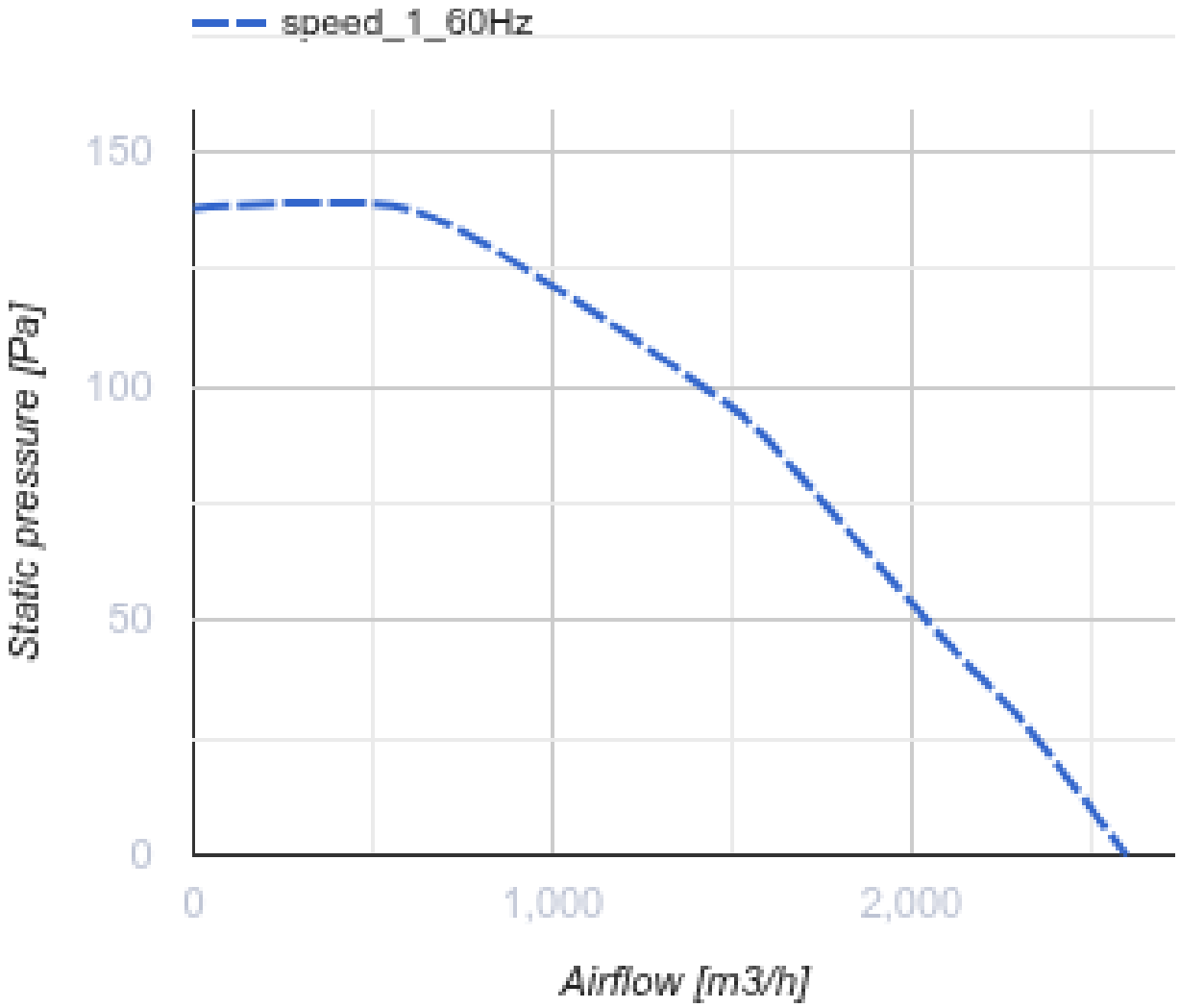
speed_1_60Hz
150
100
50
0
Static pressure [Pa]
0
1,000
2,000
Airflow [m3/h]

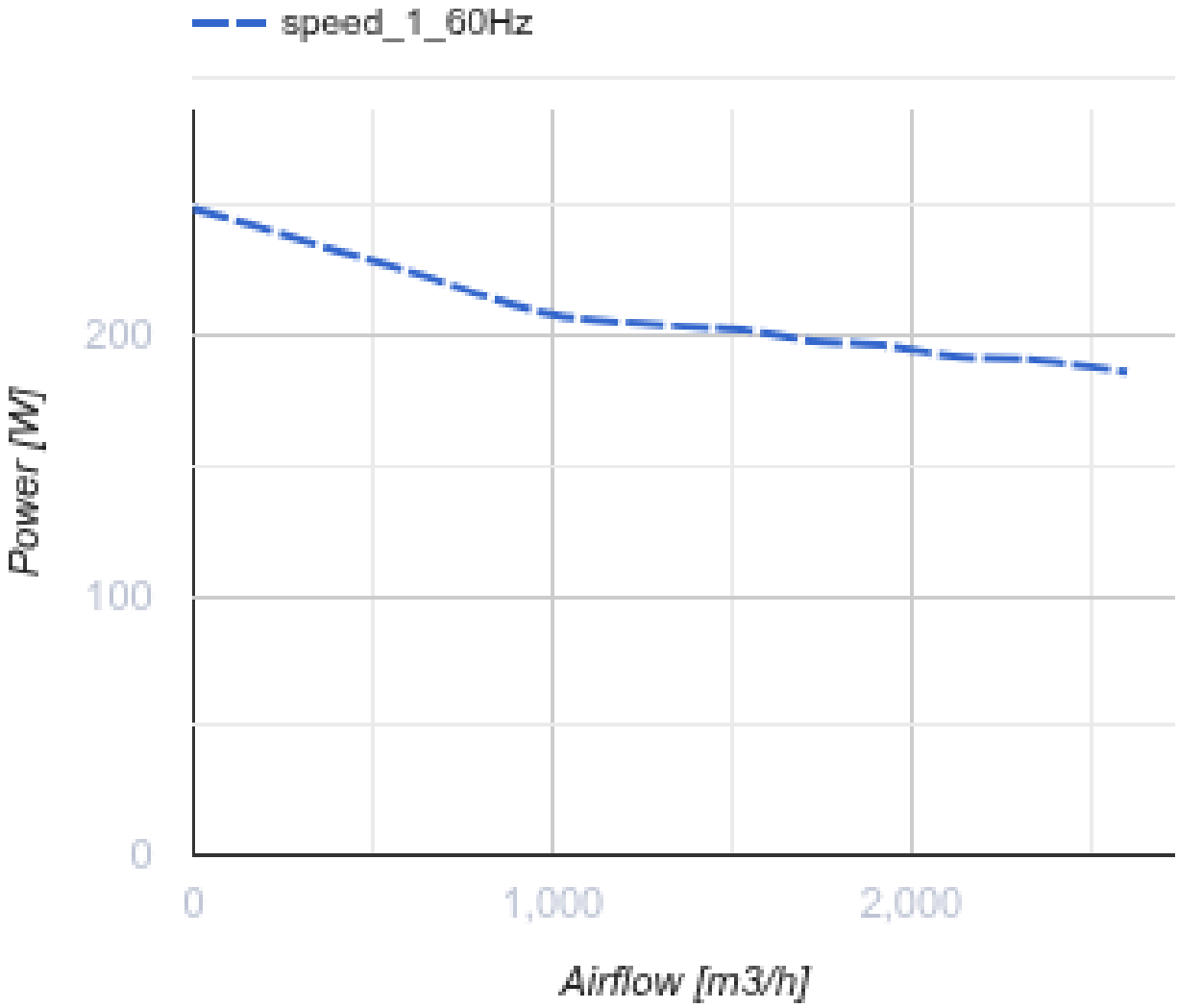

Dimensions

ØD	B	L	H	L1
349	378	300	410	40

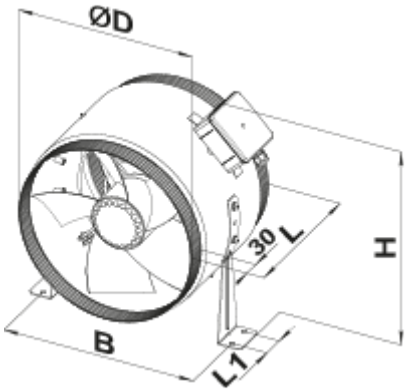

Accessories

Speed controllers

Name	Photo	Description
RSA5E-3,5-T		Speed controllers are applied for air flow control of single phase fans by means of motor step speed control
RSA5E-5,0-T		Speed controllers are applied for air flow control of single phase fans by means of motor step speed control
RSA5E-7,5-T		Speed controllers are applied for air flow control of single phase fans by means of motor step speed control
RSA5E-1,5-T		Speed controllers are applied for air flow control of single phase fans by means of motor step speed control