OVK 8D 800



Wall-mounted axial fans

- Sound pressure level LpA at 3 m: 66
- Impeller type: Axial
- Casing material: Coated steel
- Installation in any position

	Unit of measurement	OVK 8D 800
Phases	-	3
Maximum supply voltage	V	400
Minimum supply voltage	V	400
Power supply frequency	Hz	50
Rated power	W	700
Unit current	A	1.7
Maximum airflow	m³/h	15550
Sound pressure level LpA at 3 m	dB(A)	66
Weight	kg	42
Transported air temperature (max)	°C	60
Transported air temperature (min)	°C	-30
Ingress protection rating	-	IP24
Ingress protection rating of the drive	-	IP54
Impeller material	-	Coated steel

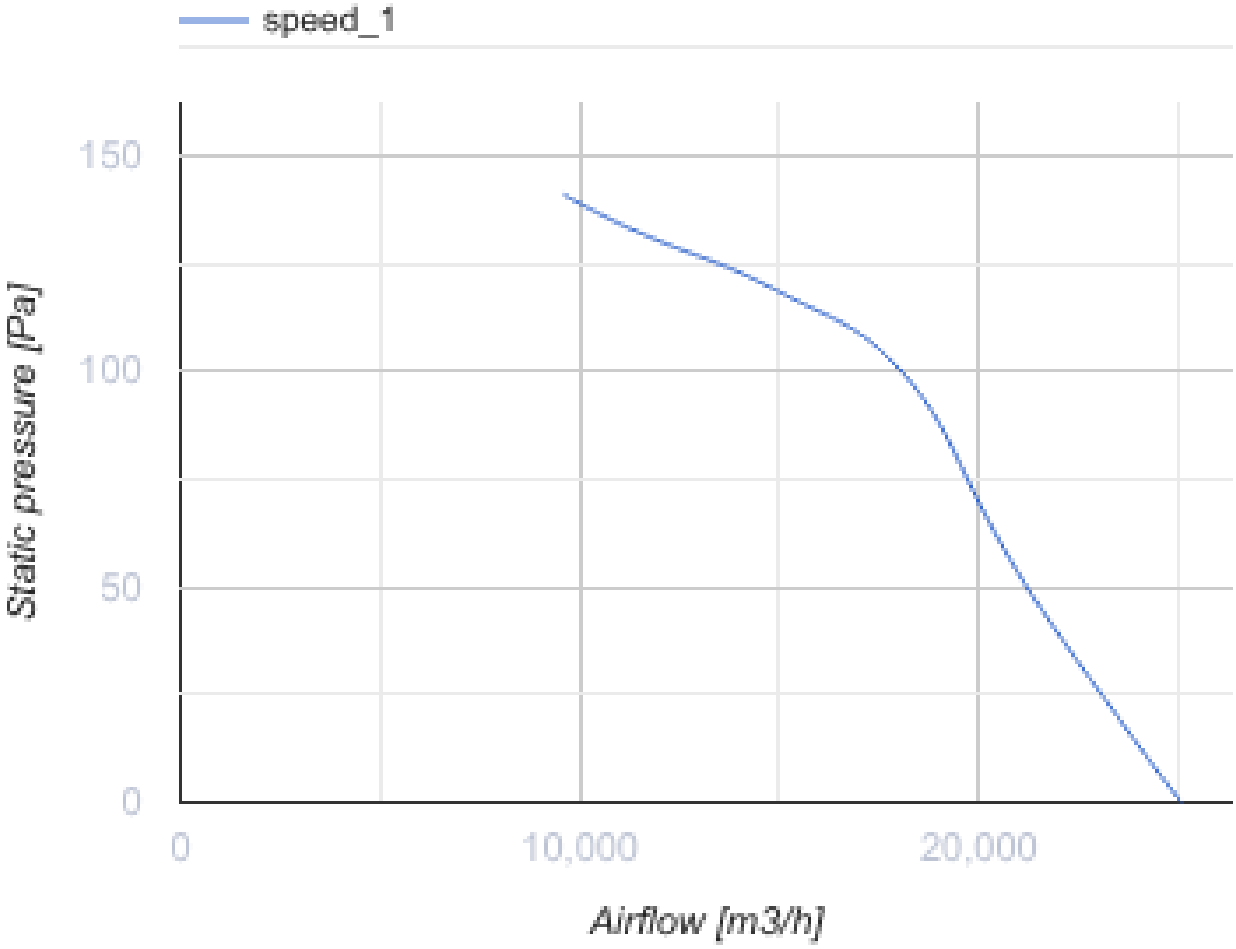
speed_1
150
100
50
0
Static pressure [Pa]
0
10,000
20,000
Airflow [m3/h]

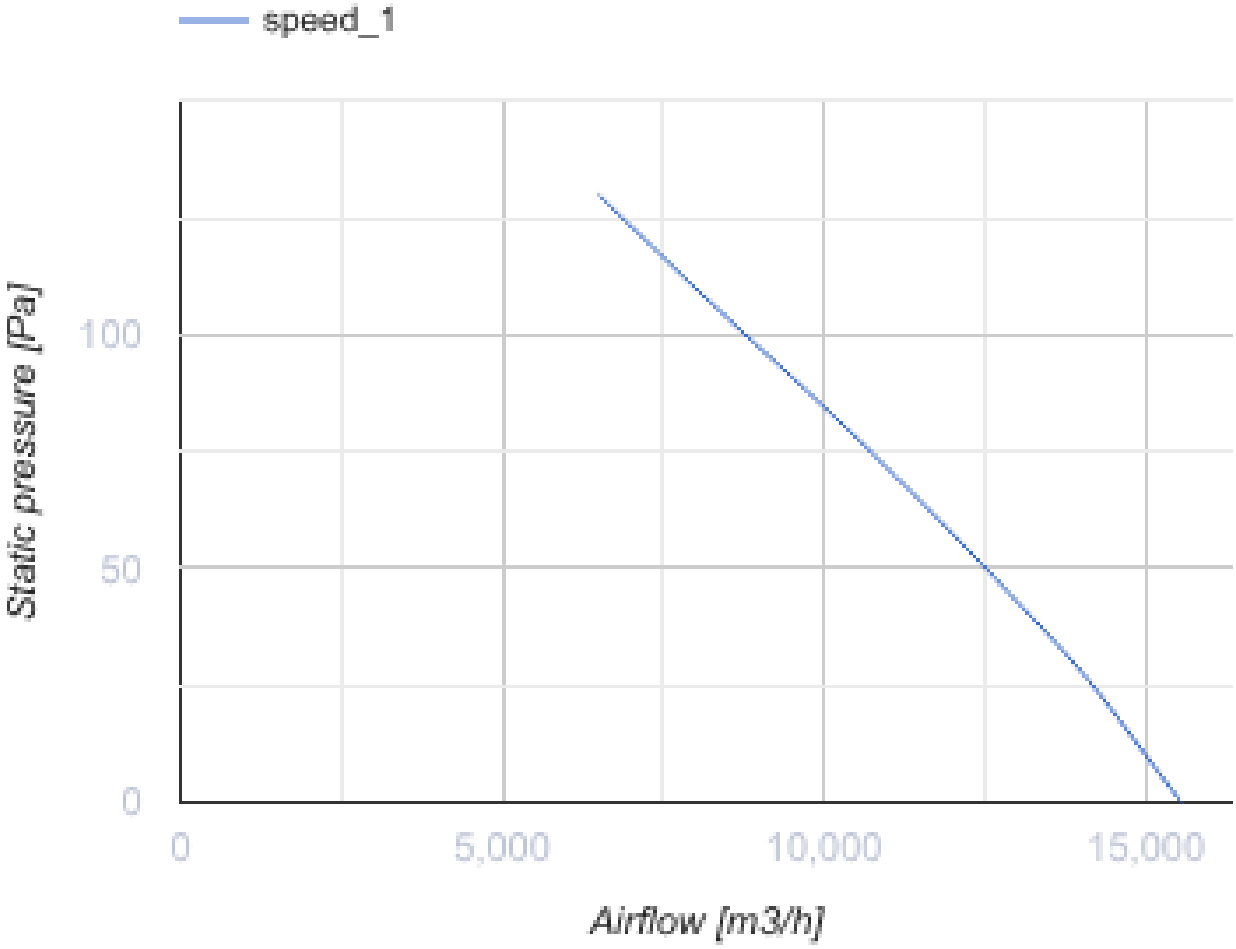
speed_1
Static pressure [Pa]
100
50
0
0
5,000
10,000
15,000
Airflow [m3/h]

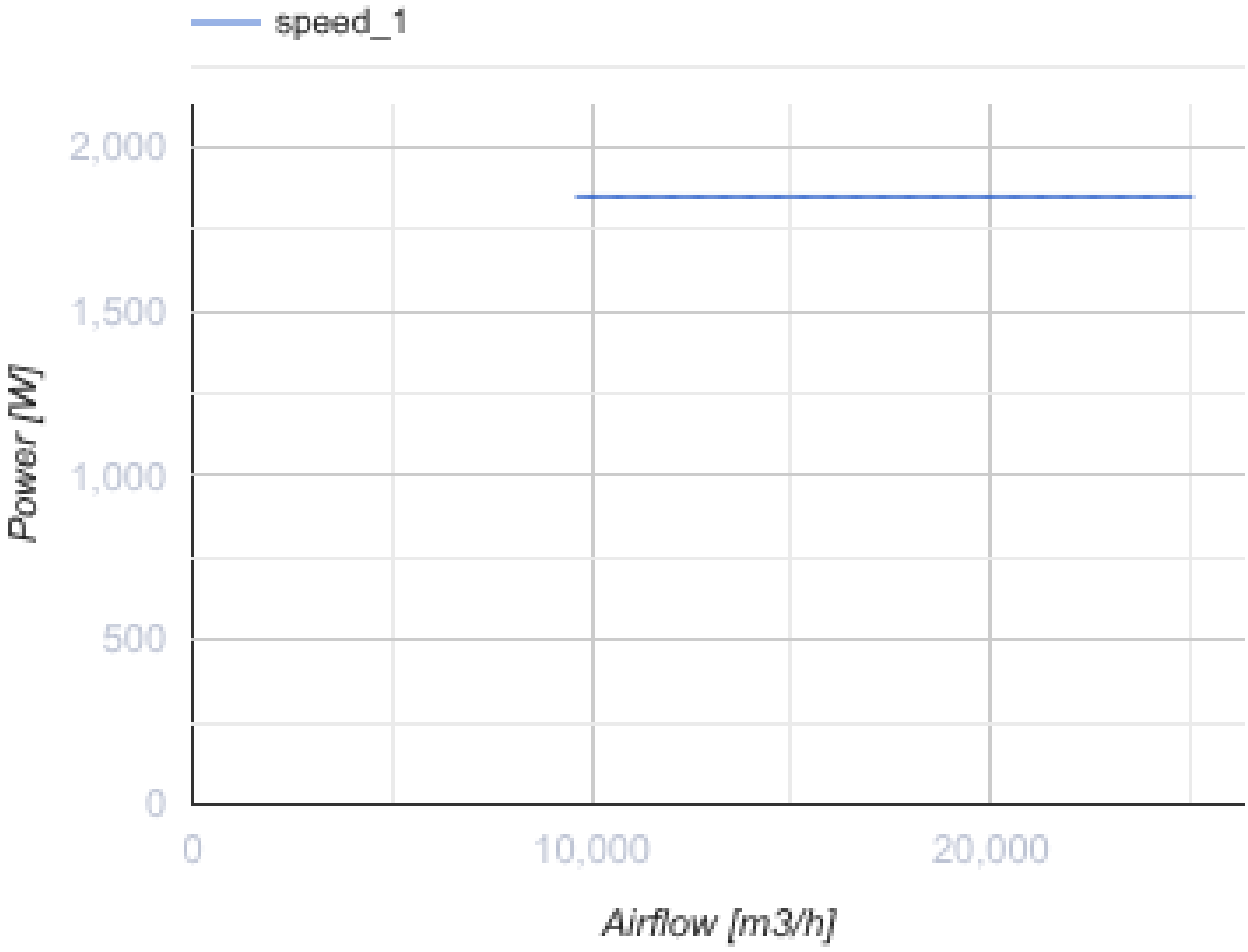

Dimensions

ØD	ØD1	ØD2	Ød	L
800	900	970	13	350

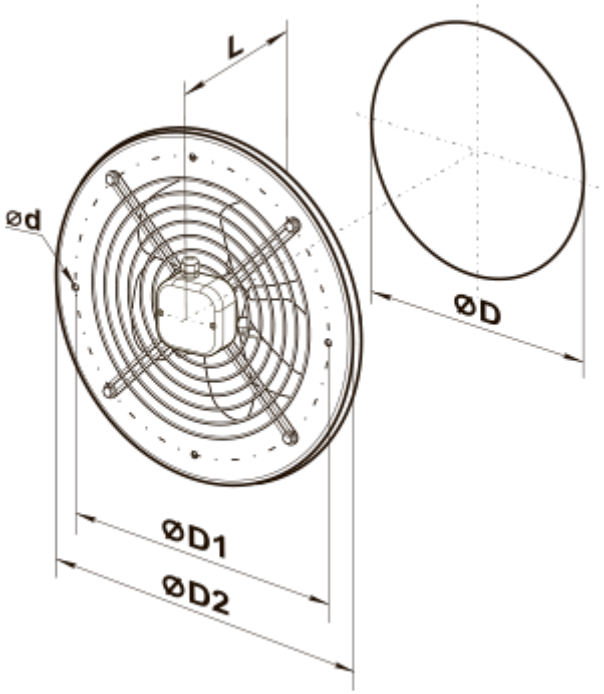
L
ØD
Ød
ØD1
ØD2