OVK 6E 630



Wall-mounted axial fans

- Sound pressure level LpA at 3 m: 59
- Impeller type: Axial
- Casing material: Coated steel
- Installation in any position

	Unit of measurement	OVK 6E 630
Phases	-	1
Maximum supply voltage	V	240
Minimum supply voltage	V	220
Power supply frequency	Hz	50
Rated power	W	540
Unit current	A	2.4
Maximum airflow	m^3/h	10900
Sound pressure level LpA at 3 m	dB(A)	59
Weight	kg	20
Transported air temperature (max)	°C	60
Transported air temperature (min)	°C	-30
Ingress protection rating	-	IP24
Ingress protection rating of the drive	-	IP54
Impeller material	-	Coated steel

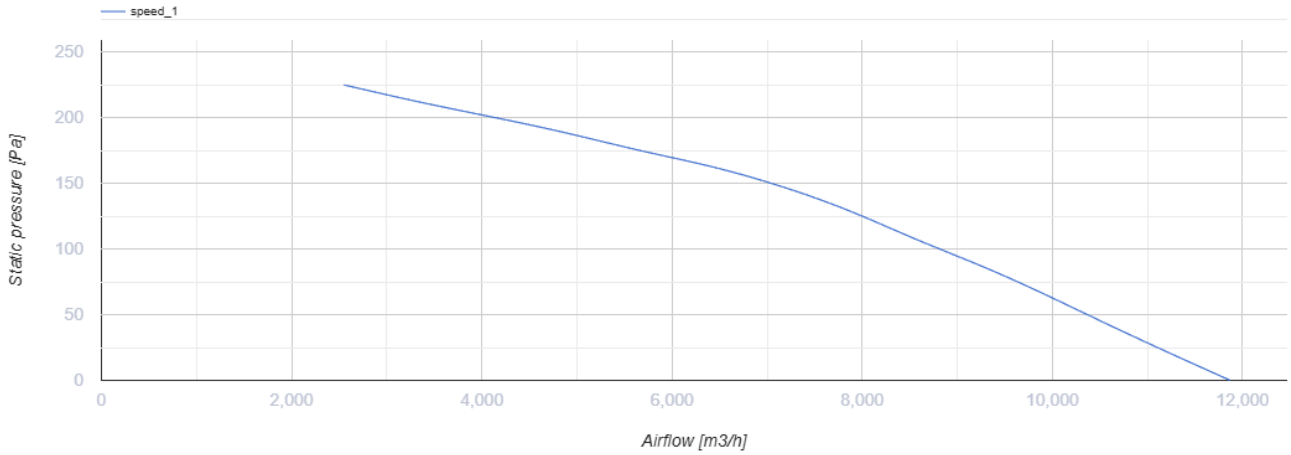
speed_1
250
200
150
100
50
0
Static pressure [Pa]
0
2,000
4,000
6,000
8,000
10,000
12,000
Airflow [m3/h]

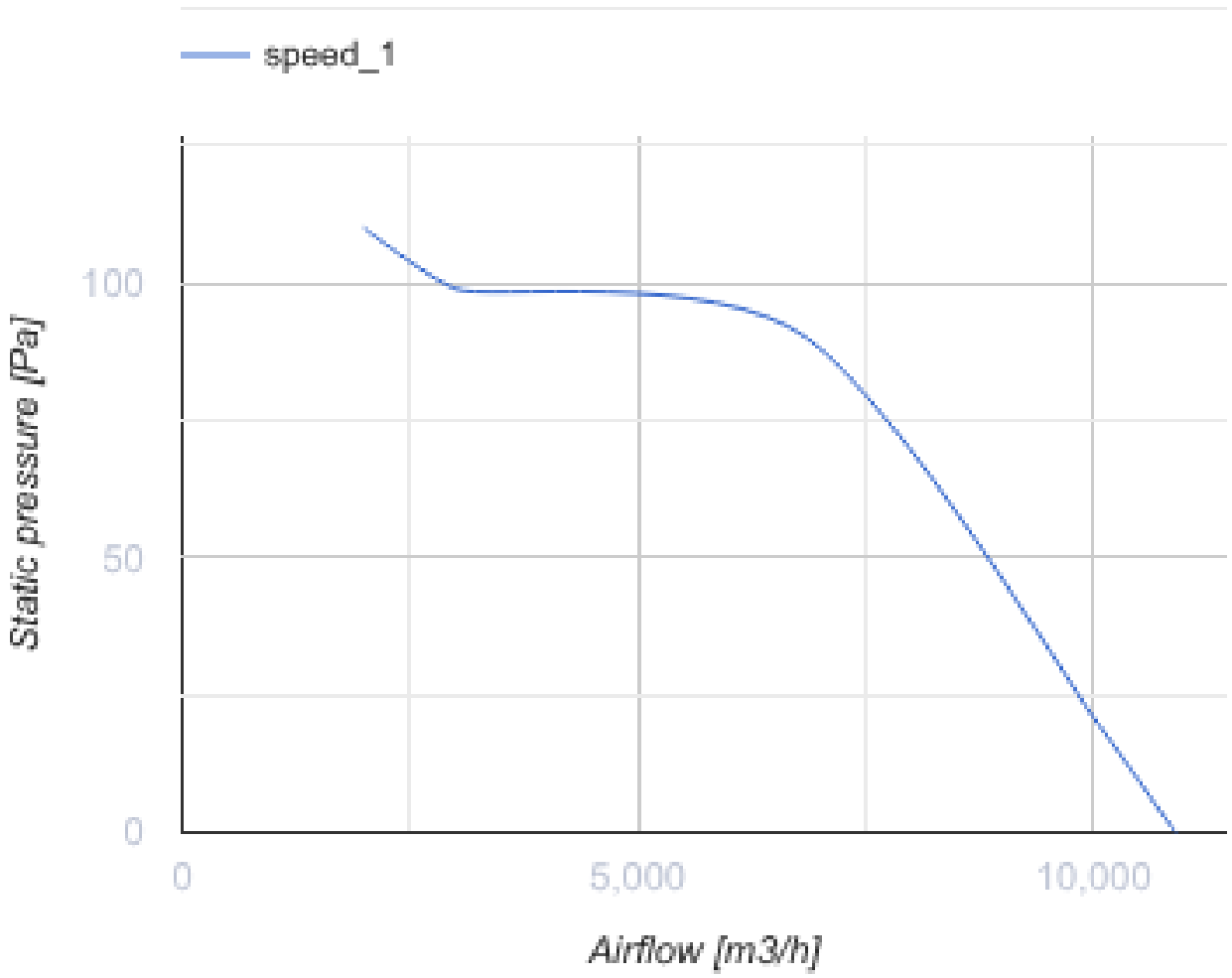
speed_1
100
50
0
Static pressure [Pa]
0
5,000
10,000
Airflow [m3/h]

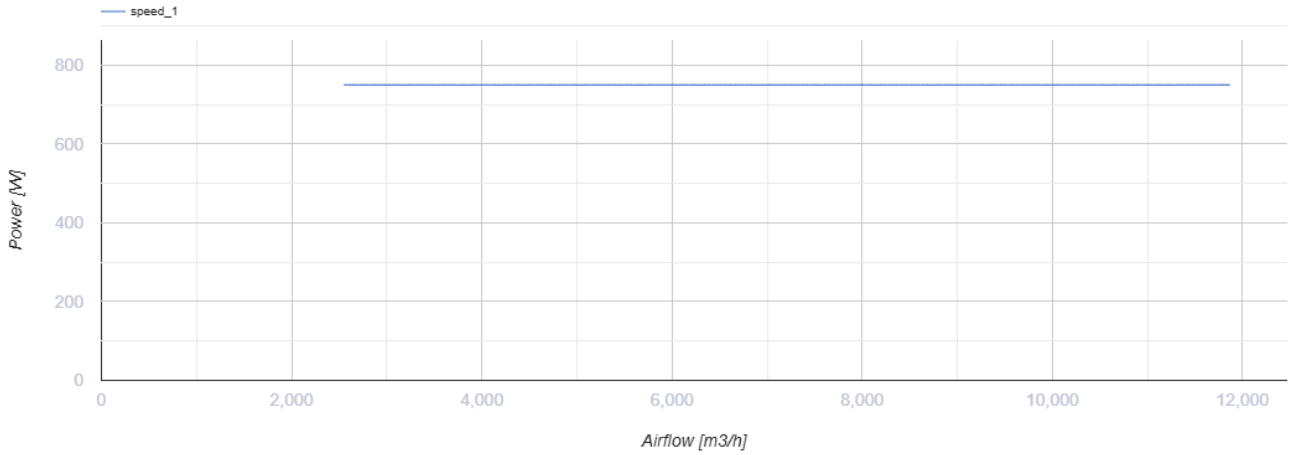

Dimensions

ØD	ØD1	ØD2	Ød	L
650	760	800	11	275

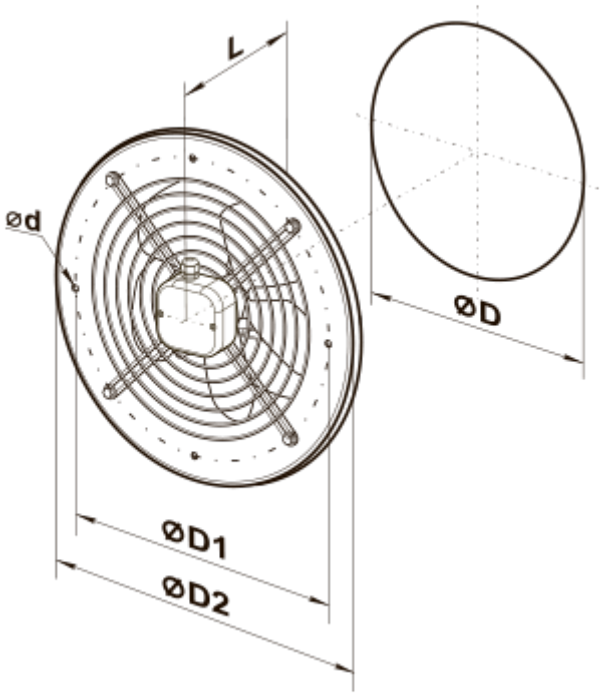

Ecodesign

Trademark	Vents
Model	OVK 6E 630
Type of drive installed	External MSD or VSD
Type of heat recovery system	None
Nominal external pressure (Pa)	90
Maximum external leakage rates (%)	2.7
Static efficiency (%)	35
Sound power level (dB(A))	92
Effective electric power input (kW)	0.5
Declared typology	NRVU UVU