OVK 6E 500 (220V/60Hz)



Wall-mounted axial fans

- Impeller type: Axial
- Casing material: Coated steel
- Installation in any position

	Unit of measurement	OVK 6E 500 (220V/60Hz)
Phases	-	1
Maximum supply voltage	V	240
Minimum supply voltage	V	220
Power supply frequency	Hz	60
Weight	kg	14
Transported air temperature (max)	°C	50
Transported air temperature (min)	°C	-30
Ingress protection rating	-	IP24
Ingress protection rating of the drive	-	IP54
Impeller material	-	Coated steel

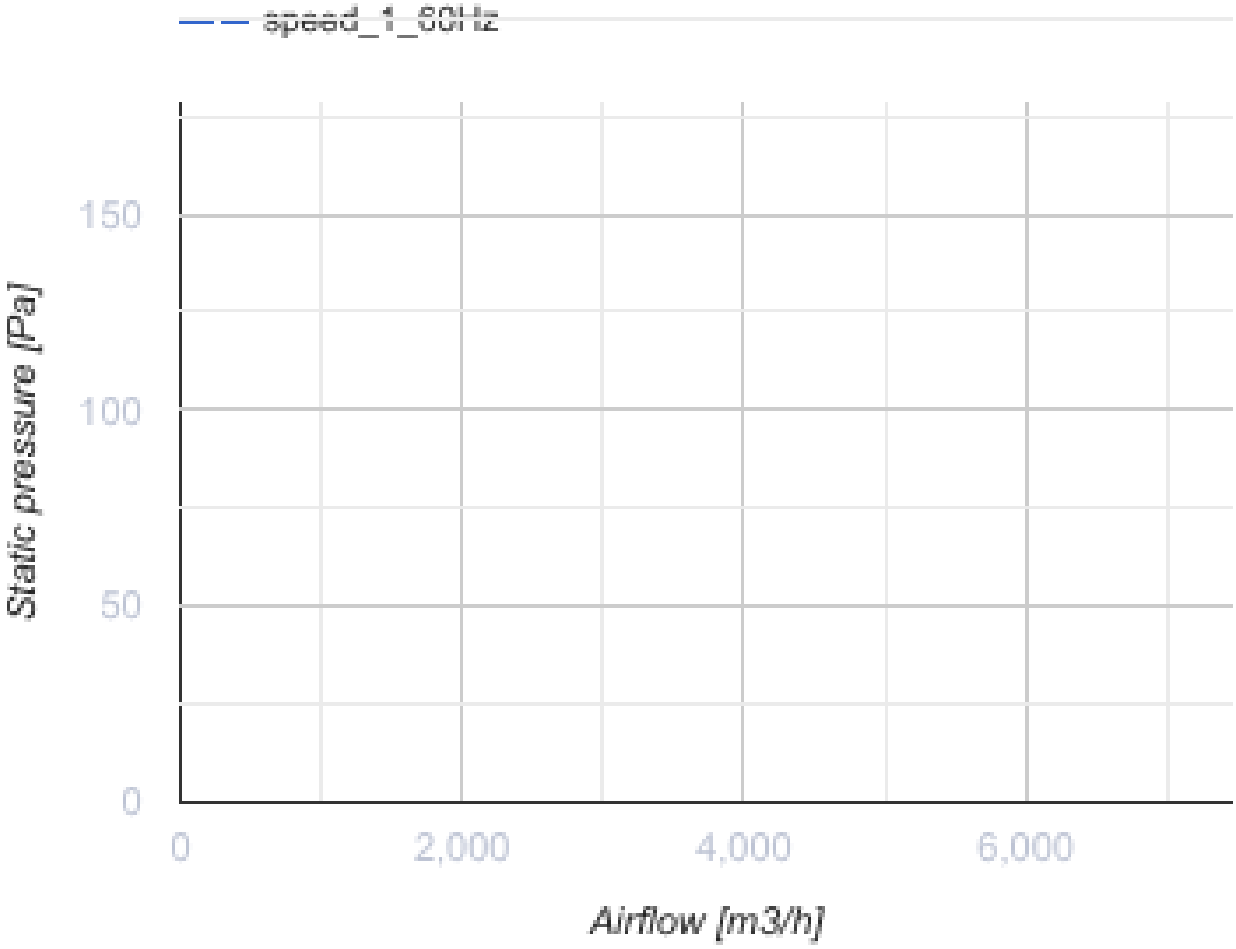
speed_1_60Hz
150
100
50
0
Static pressure [Pa]
0
2,000
4,000
6,000
Airflow [m3/h]

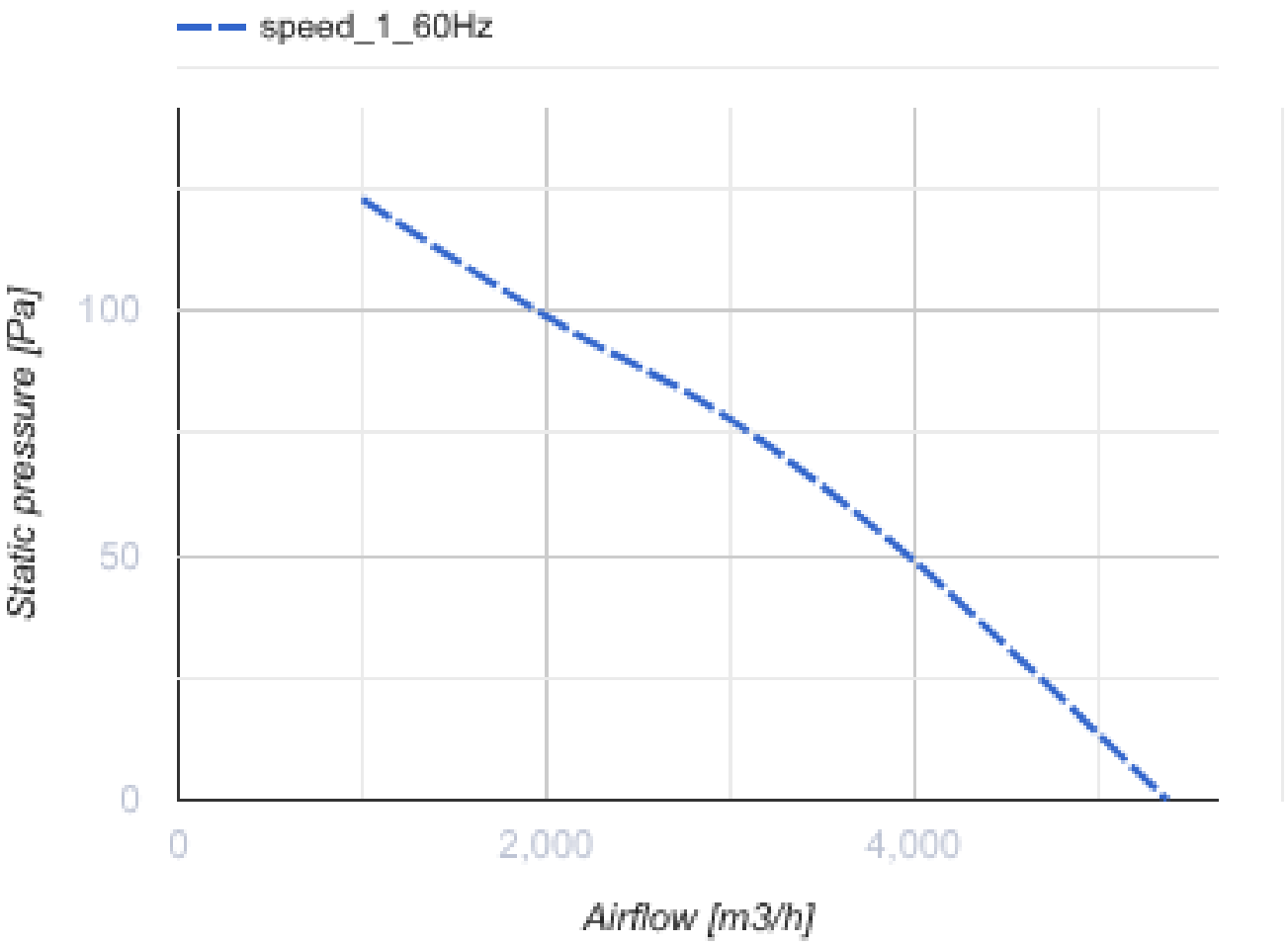
speed_1_60Hz
Static pressure [Pa]
100
50
0
0
2,000
4,000
Airflow [m3/h]

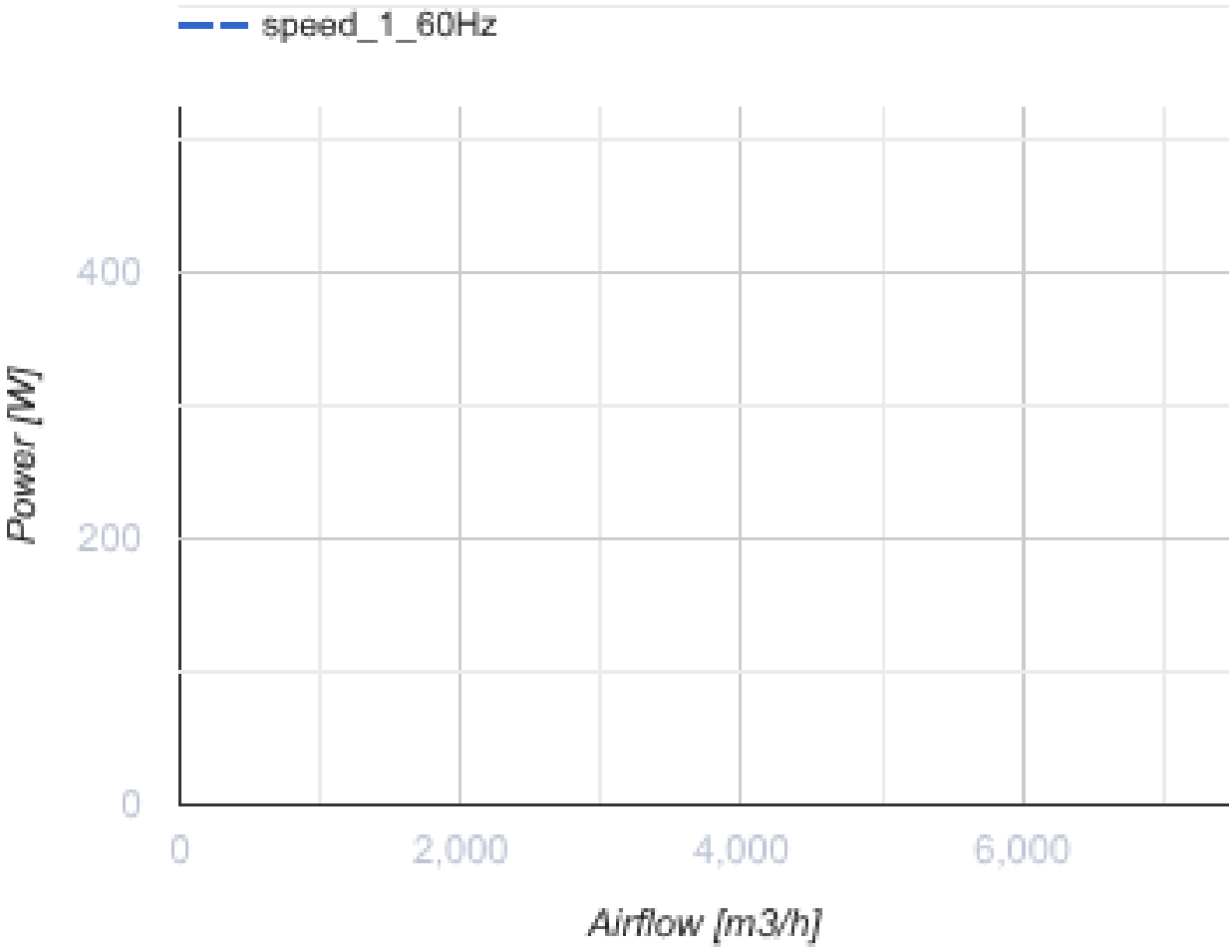

Dimensions

ØD	ØD1	ØD2	Ød	L
520	590	655	11	250

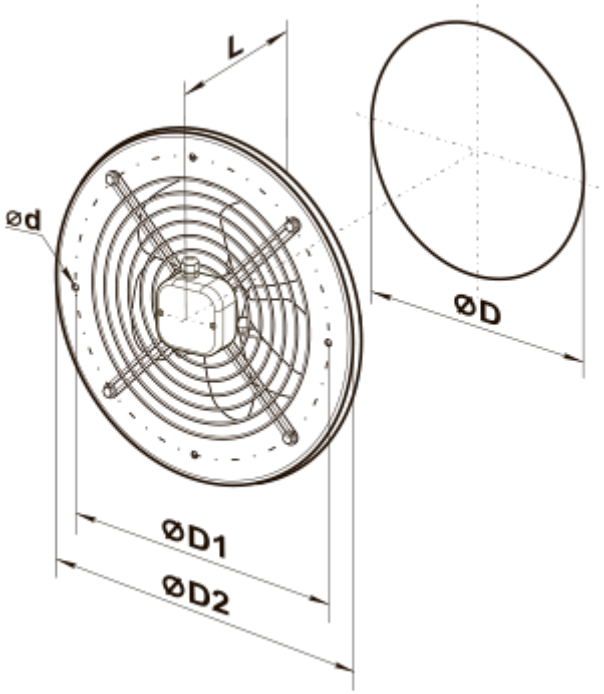
L
ØD
Ød
ØD1
ØD2

Ecodesign

Trademark	Vents
Model	OVK 6E 500 (220V/60Hz)
Type of drive installed	External MSD or VSD
Type of heat recovery system	None
Nominal external pressure (Pa)	100
Maximum external leakage rates (%)	2.7
Static efficiency (%)	32.1
Declared typology	NRVU UVU
Effective electric power input (kW)	0.44
Sound power level (dB(A))	89