# OVK 4D 550



Wall-mounted axial fans

- Sound pressure level LpA at 3 m: 64
- Impeller type: Axial
- Casing material: Coated steel
- Installation in any position

| | Unit of measurement | OVK 4D 550 |
|---|---|---|
| Connected air duct size | mm | 550 |
| Phases | - | 3 |
| Minimum supply voltage | V | 400 |
| Maximum supply voltage | V | 400 |
| Power supply frequency | Hz | 50 |
| Rated power | W | 750 |
| Unit current | A | 1.5 |
| Maximum airflow | m³/h | 9700 |
| Rotation speed at 50hz | - | 1350 |
| Sound pressure level LpA at 3 m | dB(A) | 64 |
| Weight | kg | 16.5 |
| Transported air temperature (max) | °C | 60 |
| Transported air temperature (min) | °C | -30 |
| Ingress protection rating | - | IP24 |
| Ingress protection rating of the drive | - | IP54 |
| Impeller material | - | Coated steel |

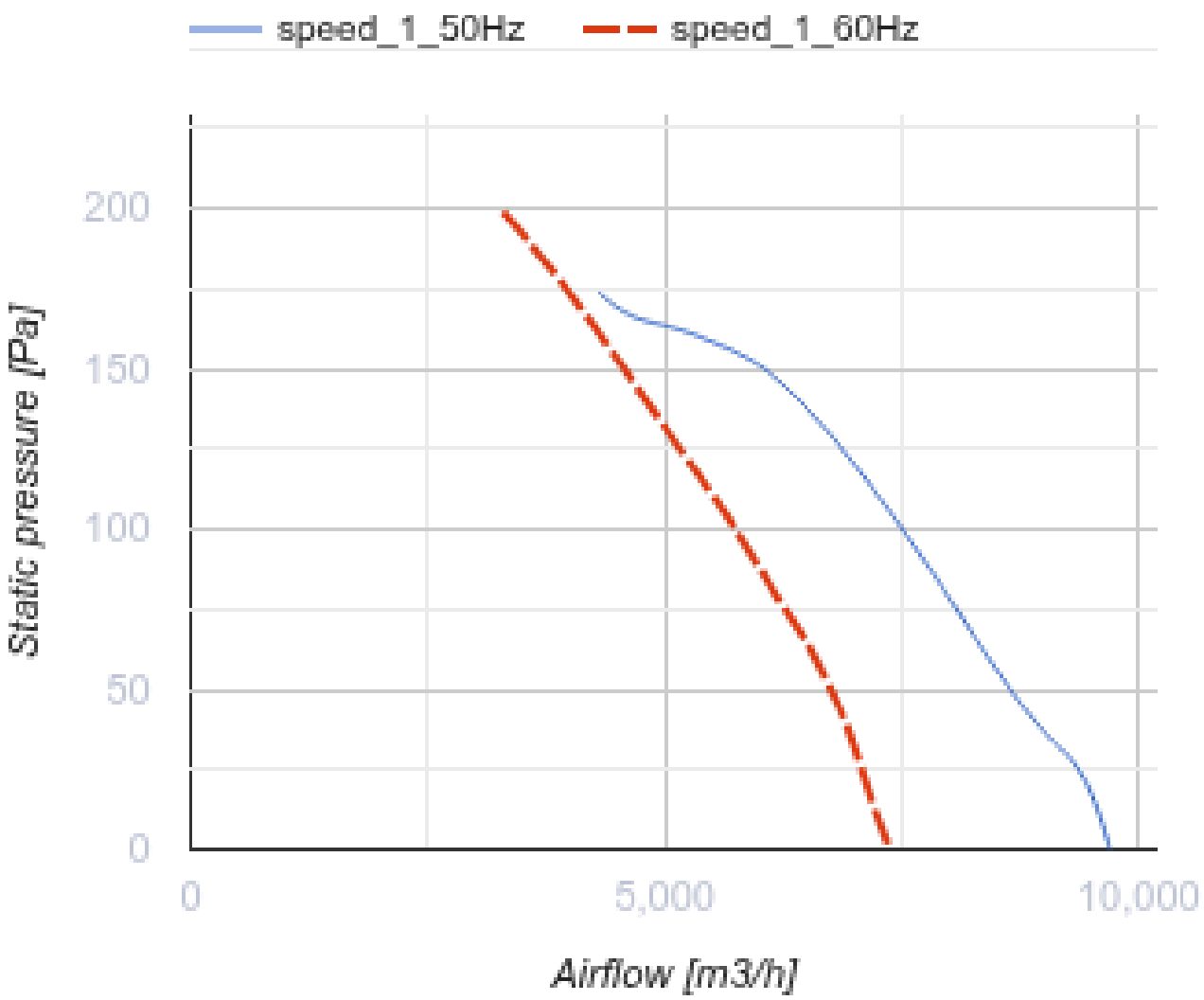
speed_1_50Hz
speed_1_60Hz
200
150
100
50
0
Static pressure [Pa]
0
5,000
10,000
Airflow [m3/h]

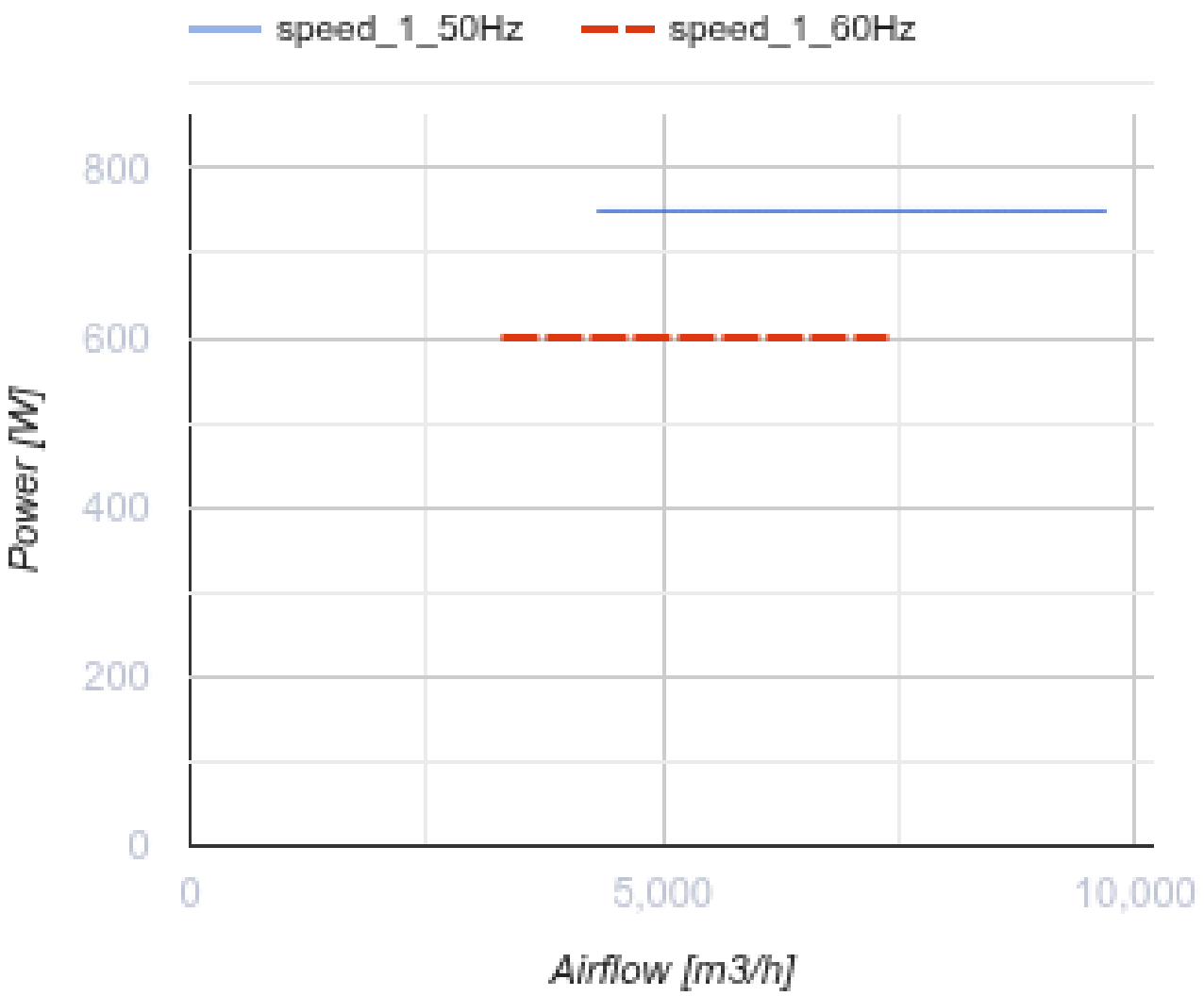


## Dimensions

| ØD | ØD1 | ØD2 | Ød | L |
|---|---|---|---|---|
| 570 | 645 | 710 | 11 | 260 |

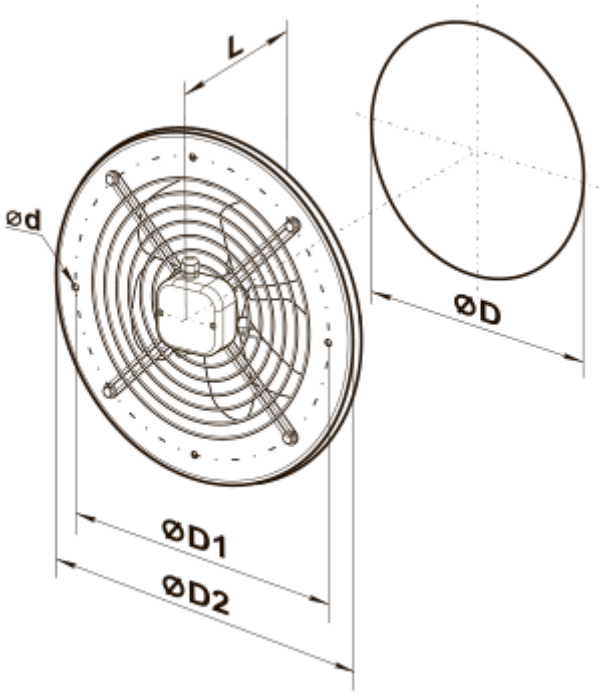
L
ØD
Ød
ØD1
ØD2

## Ecodesign

| Trademark | Vents |
|---|---|
| Model | OVK 4D 550 |
| Type of drive installed | External MSD or VSD |
| Type of heat recovery system | None |
| Nominal external pressure (Pa) | 140 |
| Maximum external leakage rates (%) | 2.7 |
| Static efficiency (%) | 38.7 |
| Declared typology | NRVU UVU |
| Effective electric power input (kW) | 0.656 |
| Sound power level (dB(A)) | 93 |