OVK 2D 250



Wall-mounted axial fans

- Sound pressure level LpA at 3 m: 51
- Impeller type: Axial
- Casing material: Coated steel
- Installation in any position

	Unit of measurement	OVK 2D 250	
Connected air duct size	mm	250	
Phases	-	3	
Minimum supply voltage	V	400	
Maximum supply voltage	V	400	
Power supply frequency	Hz	50	60
Rated power	W	80	
Unit current	A	0.22	
Maximum airflow	m³/h	1060	
Rotation speed at 50hz	-	2600	
Sound pressure level LpA at 3 m	dB(A)	51	
Weight	kg	3.8	
Transported air temperature (max)	°C	60	
Transported air temperature (min)	°C	-30	
Ingress protection rating	-	IP24	
Ingress protection rating of the drive	-	IP54	
Impeller material	-	Coated steel	

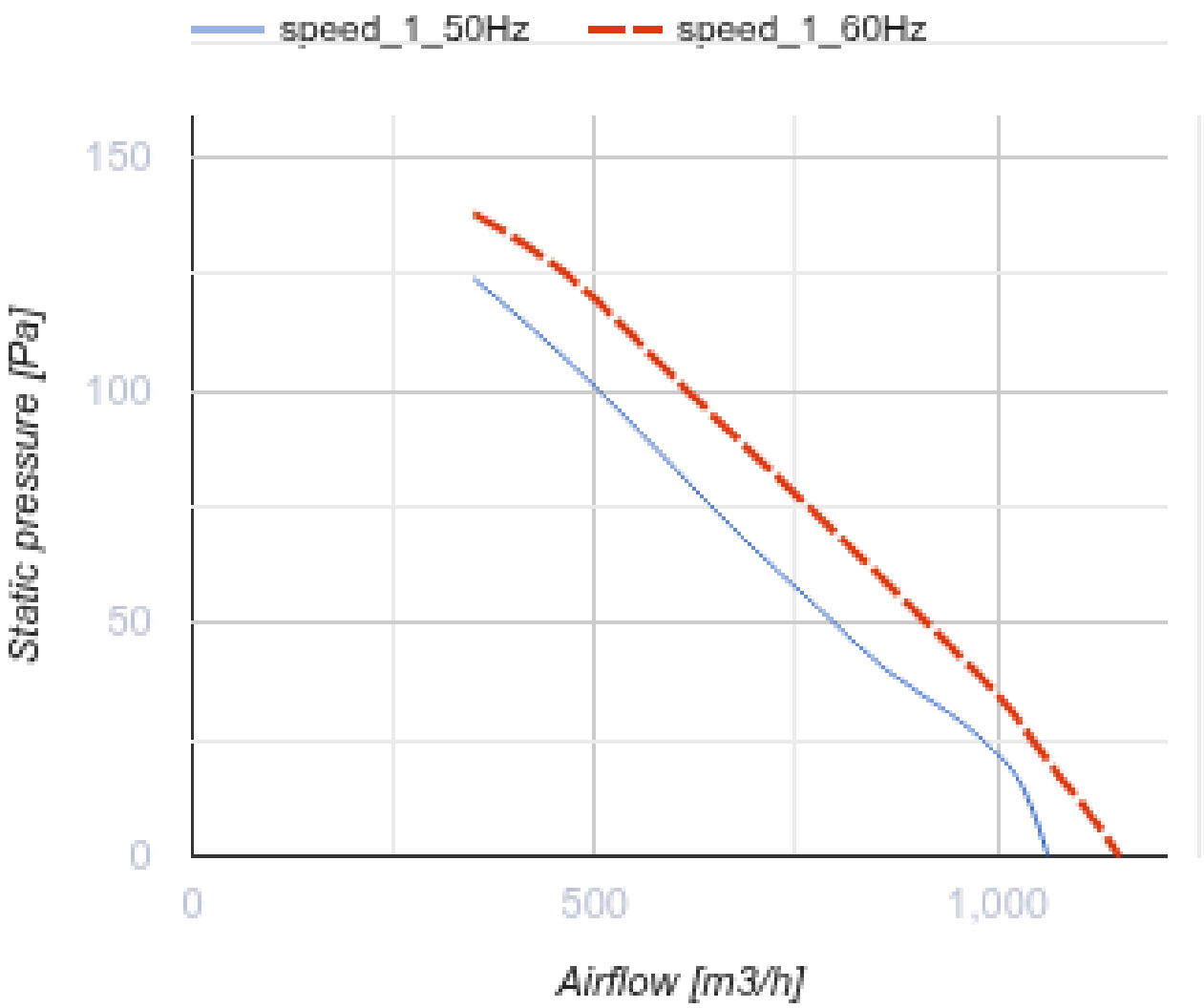
speed_1_50Hz
speed_1_60Hz
150
100
50
0
Static pressure [Pa]
0
500
1,000
Airflow [m3/h]

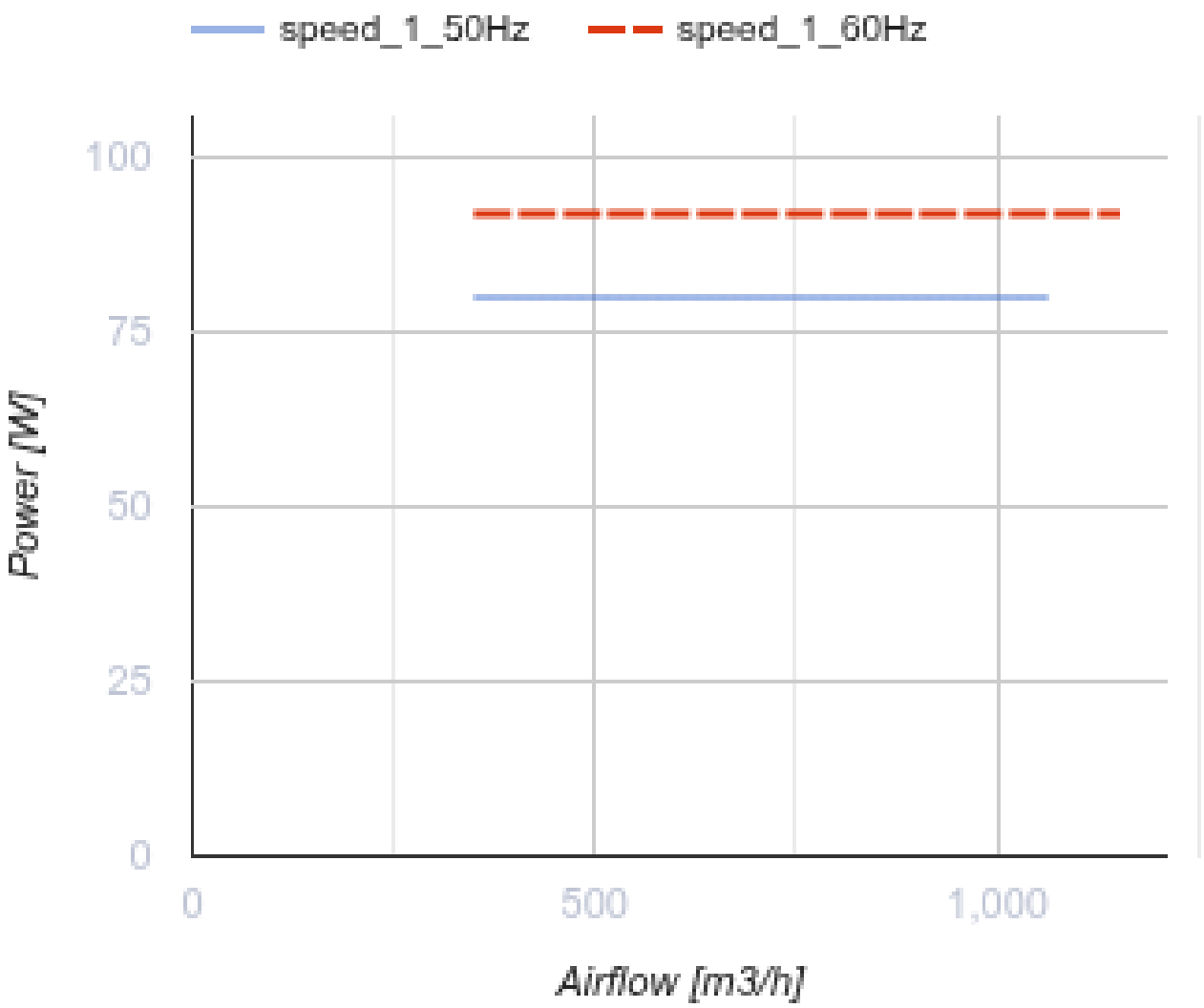

Dimensions

ØD	ØD1	ØD2	Ød	L
260	318	340	7	135

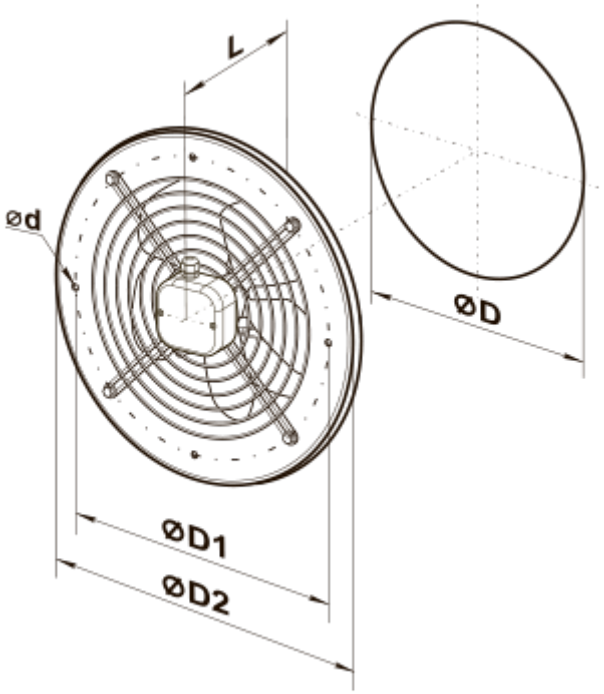
L
ØD
Ød
ØD1
ØD2