OV 6E 550



Wall-mounted axial fans

- Sound pressure level LpA at 3 m: 58
- Impeller type: Axial
- Casing material: Coated steel
- Installation in any position

	Unit of measurement	OV 6E 550
Phases	-	1
Maximum supply voltage	V	240
Minimum supply voltage	V	220
Power supply frequency	Hz	50
Rated power	W	330
Unit current	A	1.6
Maximum airflow	m^3/h	6400
Sound pressure level LpA at 3 m	dB(A)	58
Weight	kg	16.5
Transported air temperature (max)	°C	60
Transported air temperature (min)	°C	-30
Ingress protection rating	-	IP24
Ingress protection rating of the drive	-	IP54
Impeller material	-	Coated steel

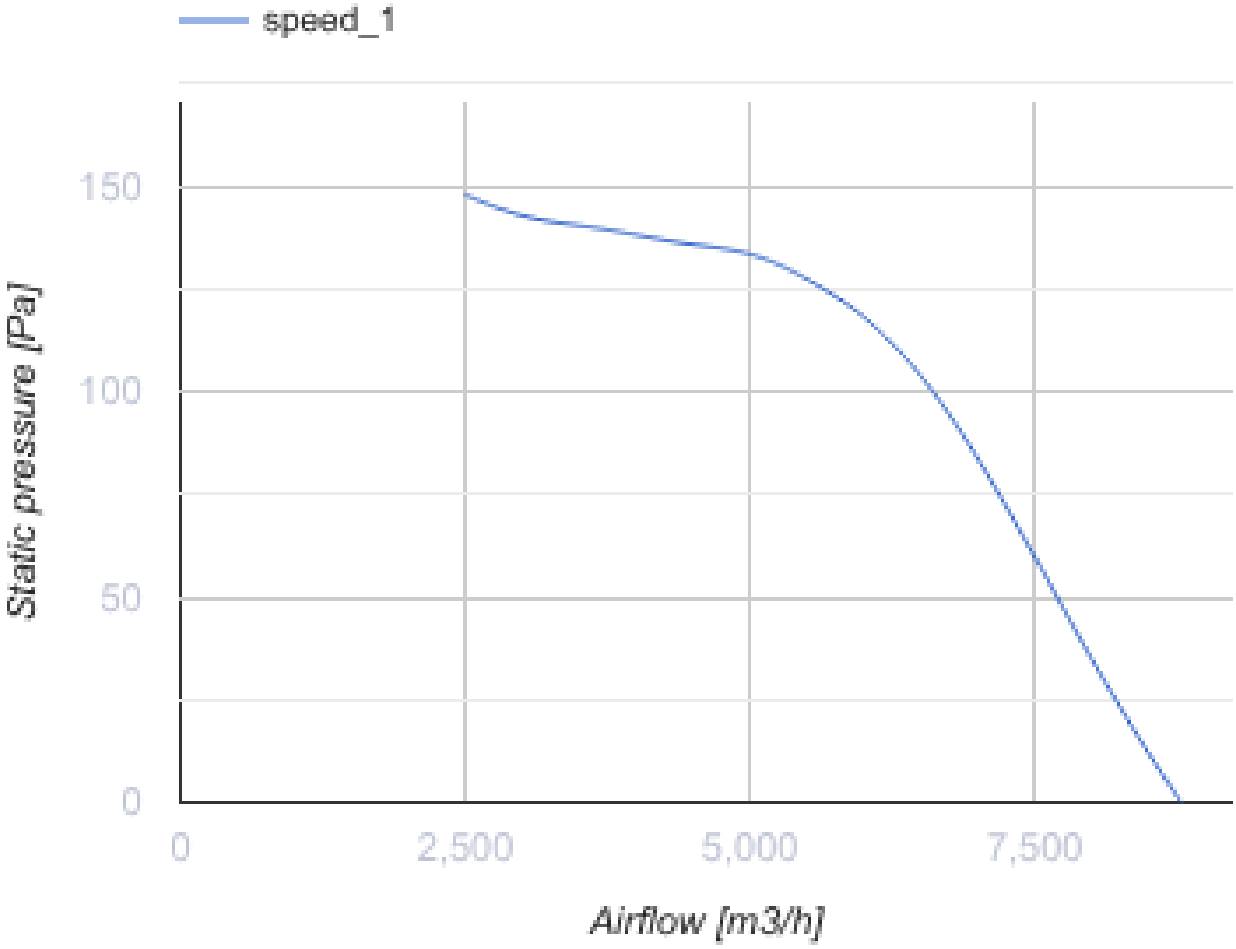
speed_1
150
100
50
0
Static pressure [Pa]
0
2,500
5,000
7,500
Airflow [m3/h]

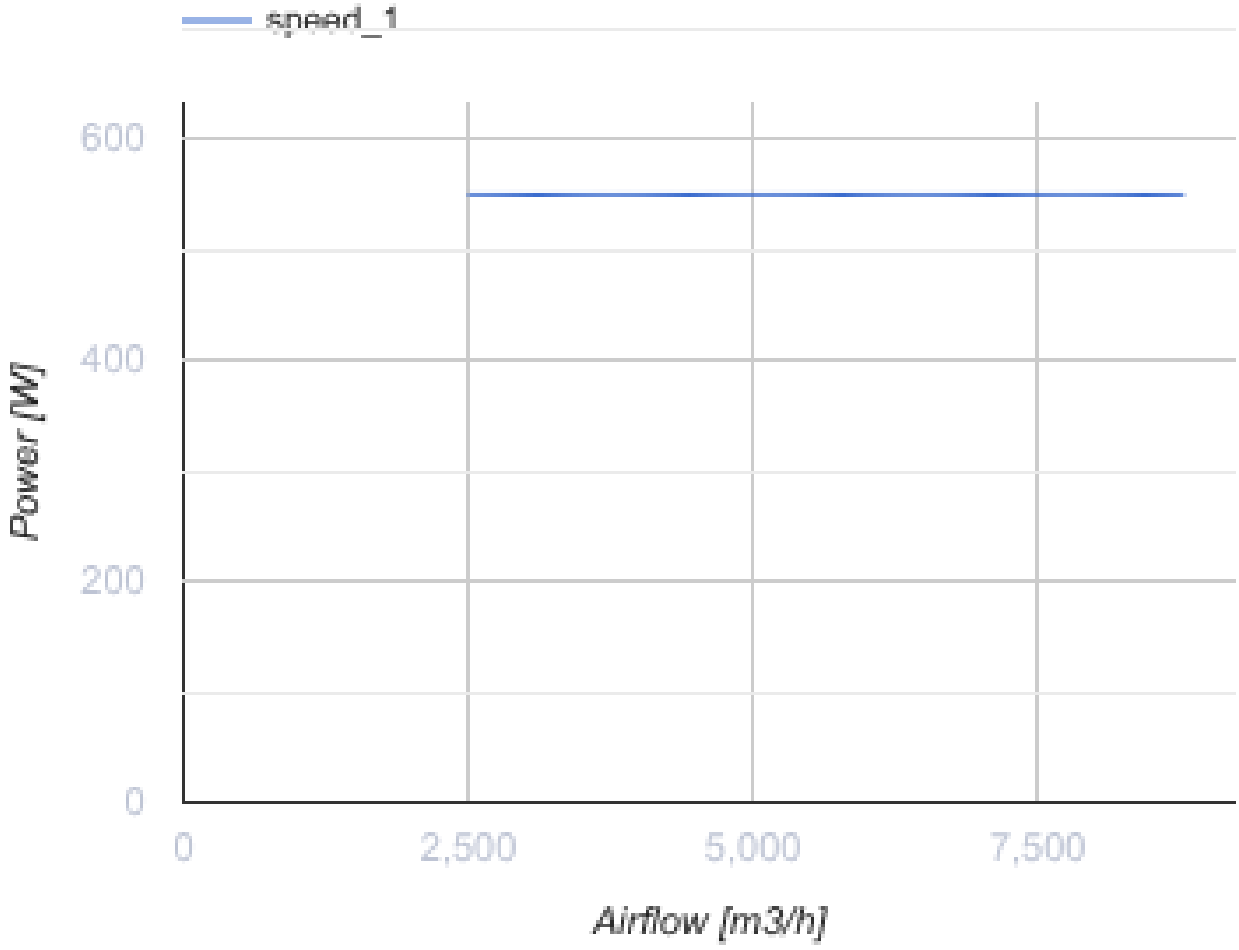

Dimensions

ØD	Ød	B	B1	L
570	11	725	675	260

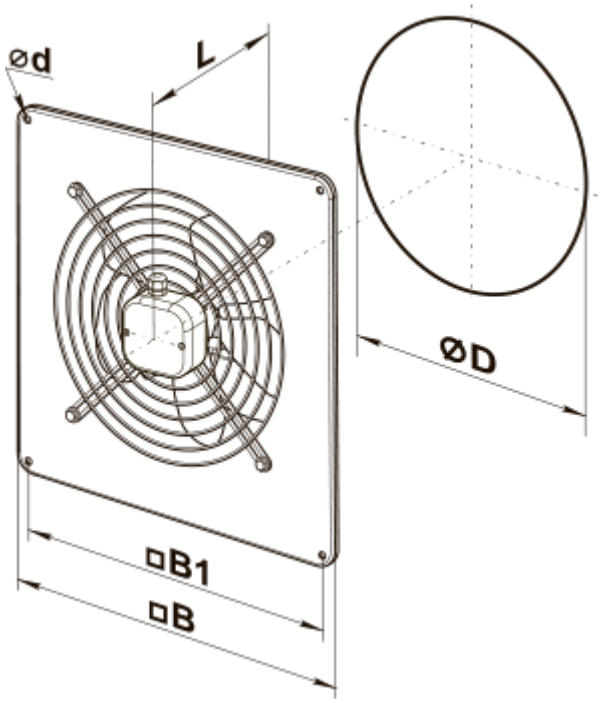
ød
L
ØD
□B1
□B

Ecodesign

Trademark	Vents
Model	OV 6E 550
Type of drive installed	External MSD or VSD
Type of heat recovery system	None
Nominal external pressure (Pa)	120
Maximum external leakage rates (%)	2.7
Static efficiency (%)	34.7
Sound power level (dB(A))	90
Declared typology	NRVU UVU
Effective electric power input (kW)	0.581