OV 6E 500



Wall-mounted axial fans

- Sound pressure level LpA at 3 m: 56
- Impeller type: Axial
- Casing material: Coated steel
- Installation in any position

	Unit of measurement	OV 6E 500
Phases	-	1
Maximum supply voltage	V	240
Minimum supply voltage	V	220
Power supply frequency	Hz	50
Rated power	W	220
Unit current	A	1.1
Maximum airflow	m^3/h	4880
Sound pressure level LpA at 3 m	dB(A)	56
Weight	kg	14
Transported air temperature (max)	°C	60
Transported air temperature (min)	°C	-30
Ingress protection rating	-	IP24
Ingress protection rating of the drive	-	IP54
Impeller material	-	Coated steel

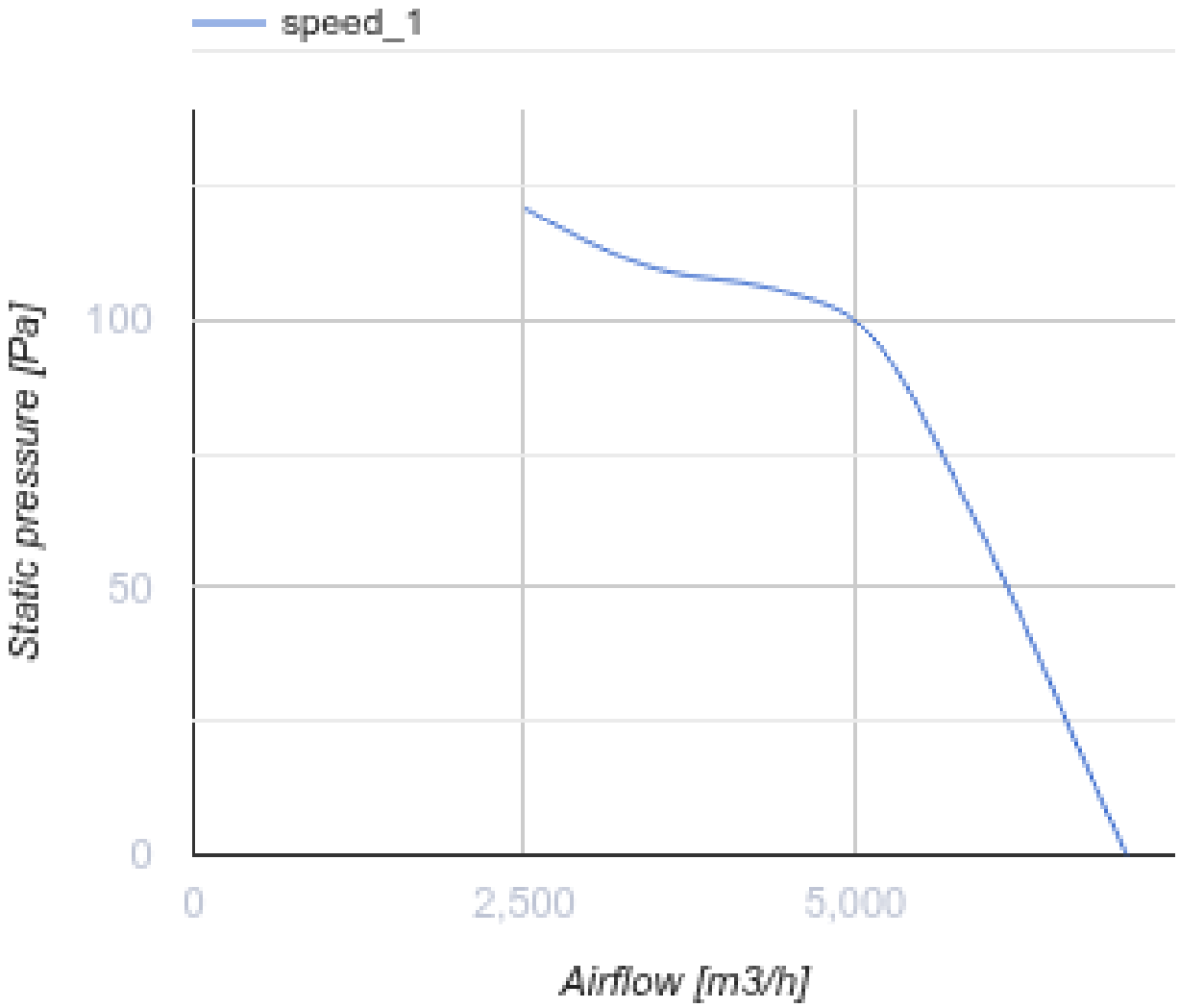
speed_1
Static pressure [Pa]
100
50
0
0
2,500
5,000
Airflow [m3/h]

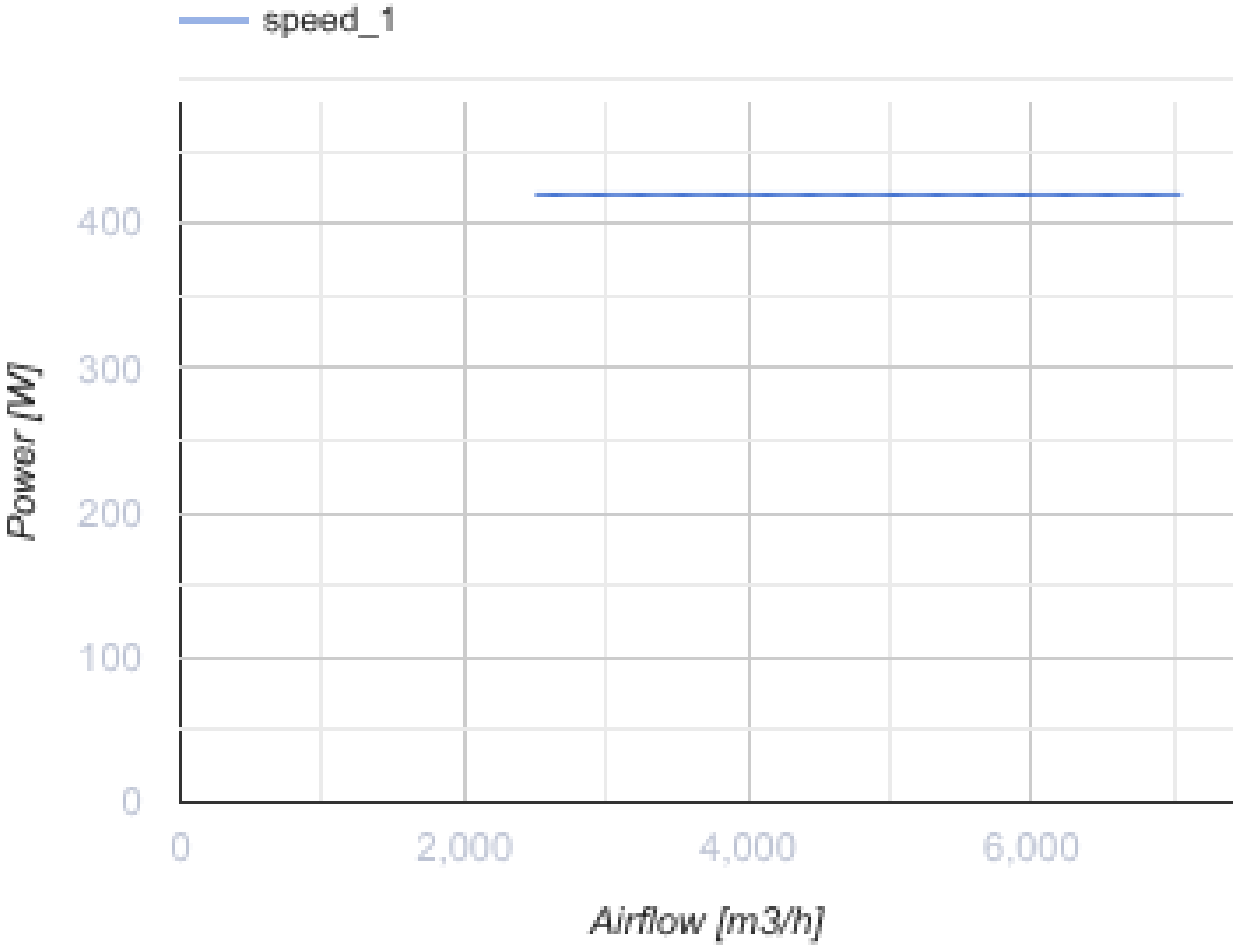

Dimensions

ØD	Ød	B	B1	L
520	11	655	615	250

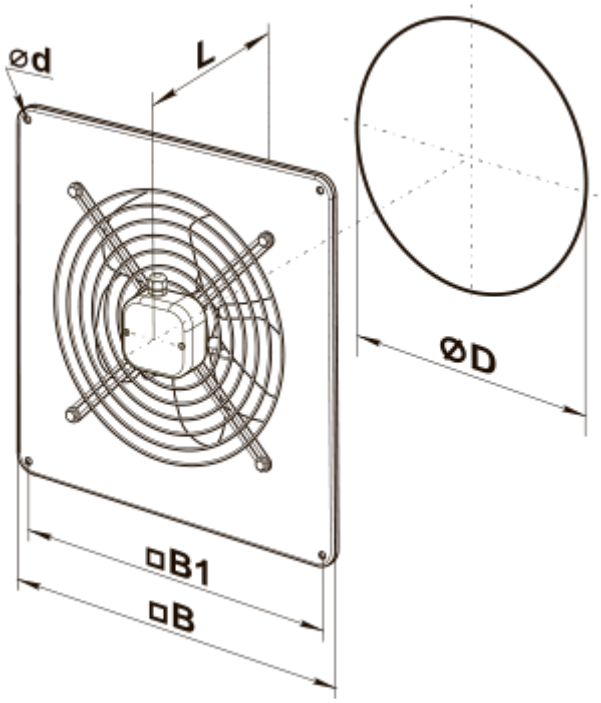
ød
L
ØD
□B1
□B

Ecodesign

Trademark	Vents
Model	OV 6E 500
Type of drive installed	External MSD or VSD
Type of heat recovery system	None
Nominal external pressure (Pa)	100
Maximum external leakage rates (%)	2.7
Static efficiency (%)	32.1
Sound power level (dB(A))	89
Declared typology	NRVU UVU
Effective electric power input (kW)	0.44