OV 6D 550



Wall-mounted axial fans

- Sound pressure level LpA at 3 m: 61
- Impeller type: Axial
- Casing material: Coated steel
- Installation in any position

	Unit of measurement	OV 6D 550
Phases	-	3
Maximum supply voltage	V	400
Minimum supply voltage	V	400
Power supply frequency	Hz	50
Rated power	W	337
Unit current	A	0.9
Maximum airflow	m^3/h	6400
Sound pressure level LpA at 3 m	dB(A)	61
Weight	kg	16.5
Transported air temperature (max)	°C	60
Transported air temperature (min)	°C	-30
Ingress protection rating	-	IP24
Ingress protection rating of the drive	-	IP54
Impeller material	-	Coated steel

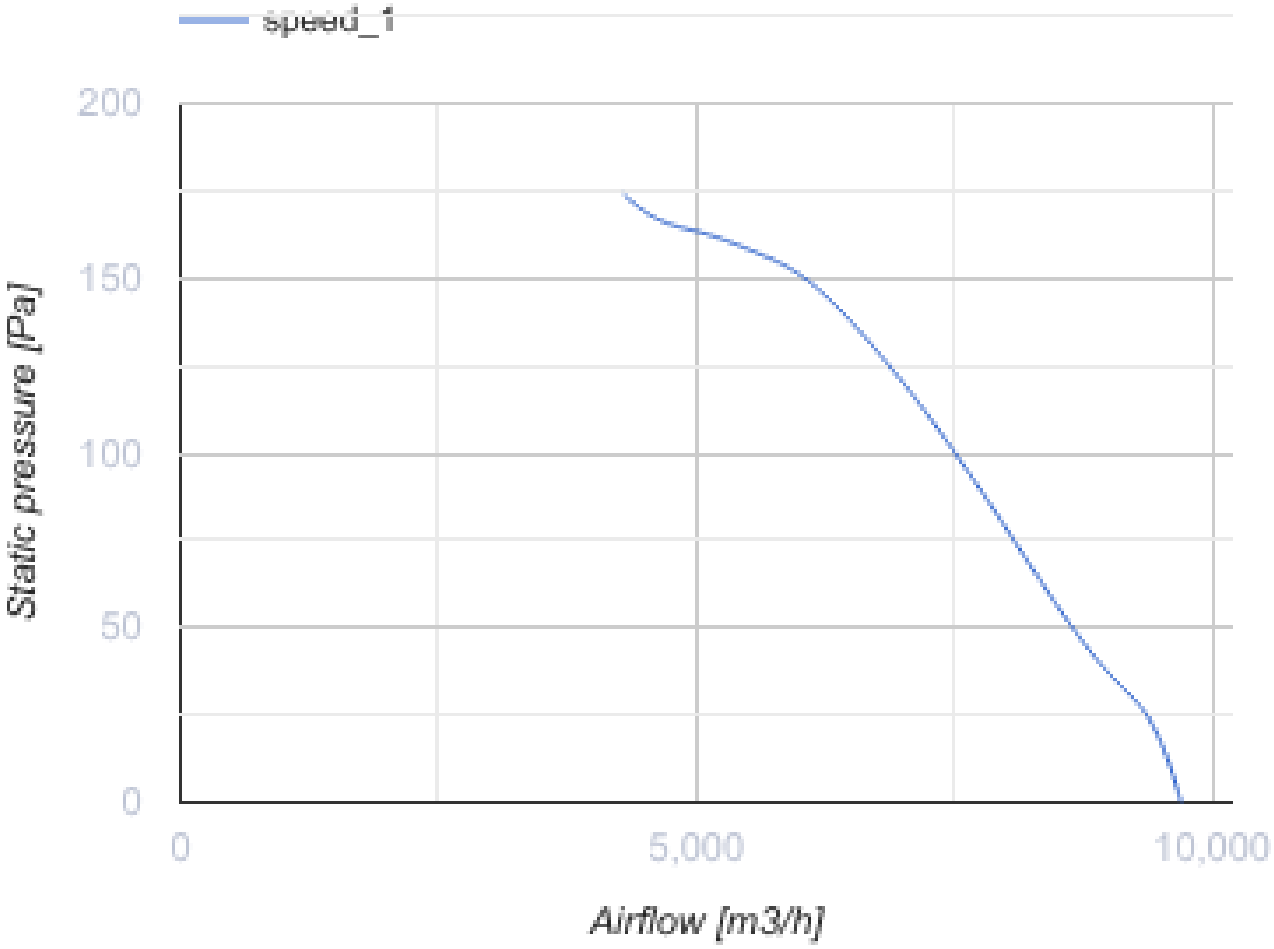
speed_1
200
150
100
50
0
Static pressure [Pa]
0
5,000
10,000
Airflow [m3/h]

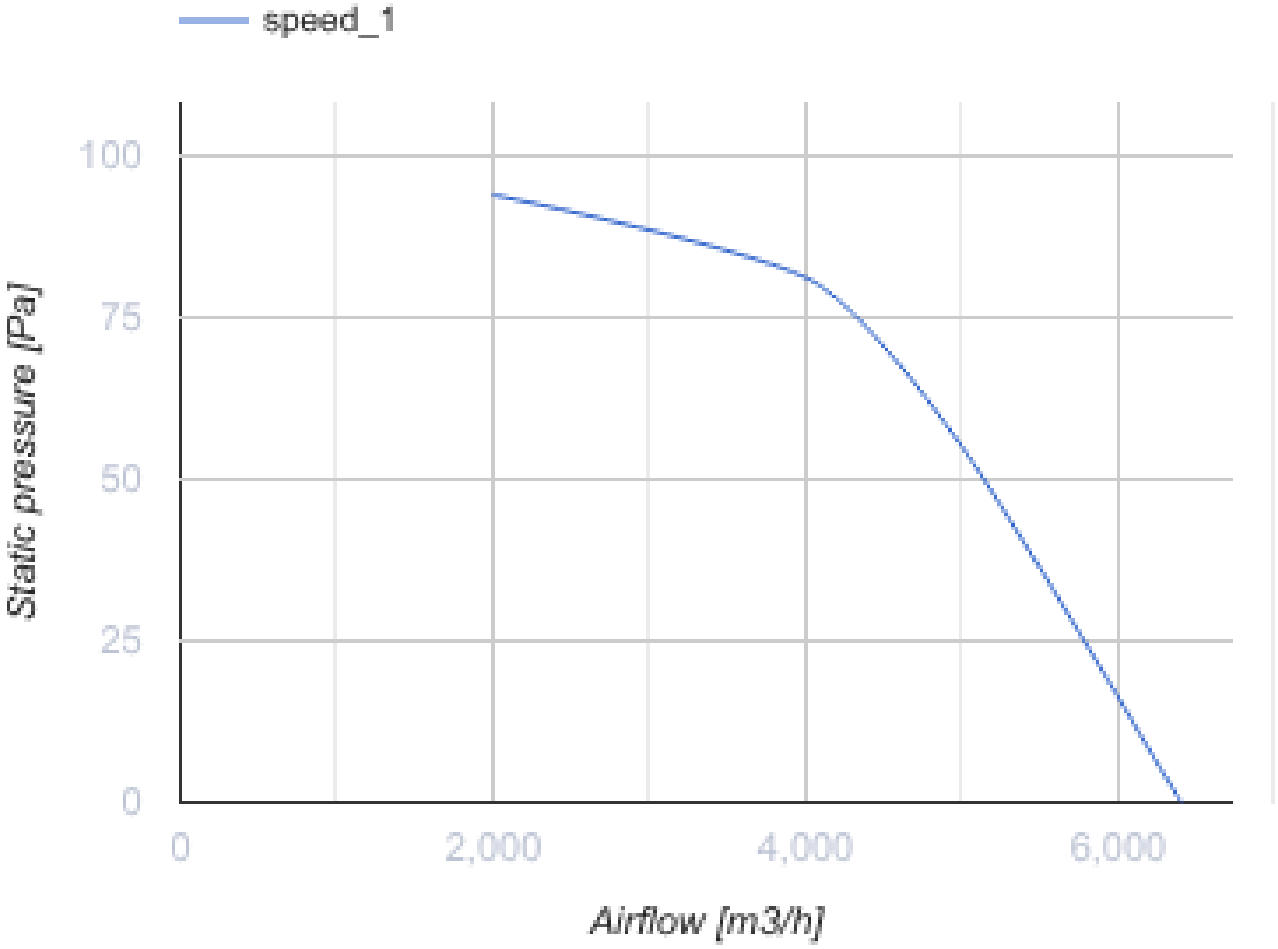
speed_1
100
75
50
25
0
Static pressure [Pa]
0
2,000
4,000
6,000
Airflow [m3/h]

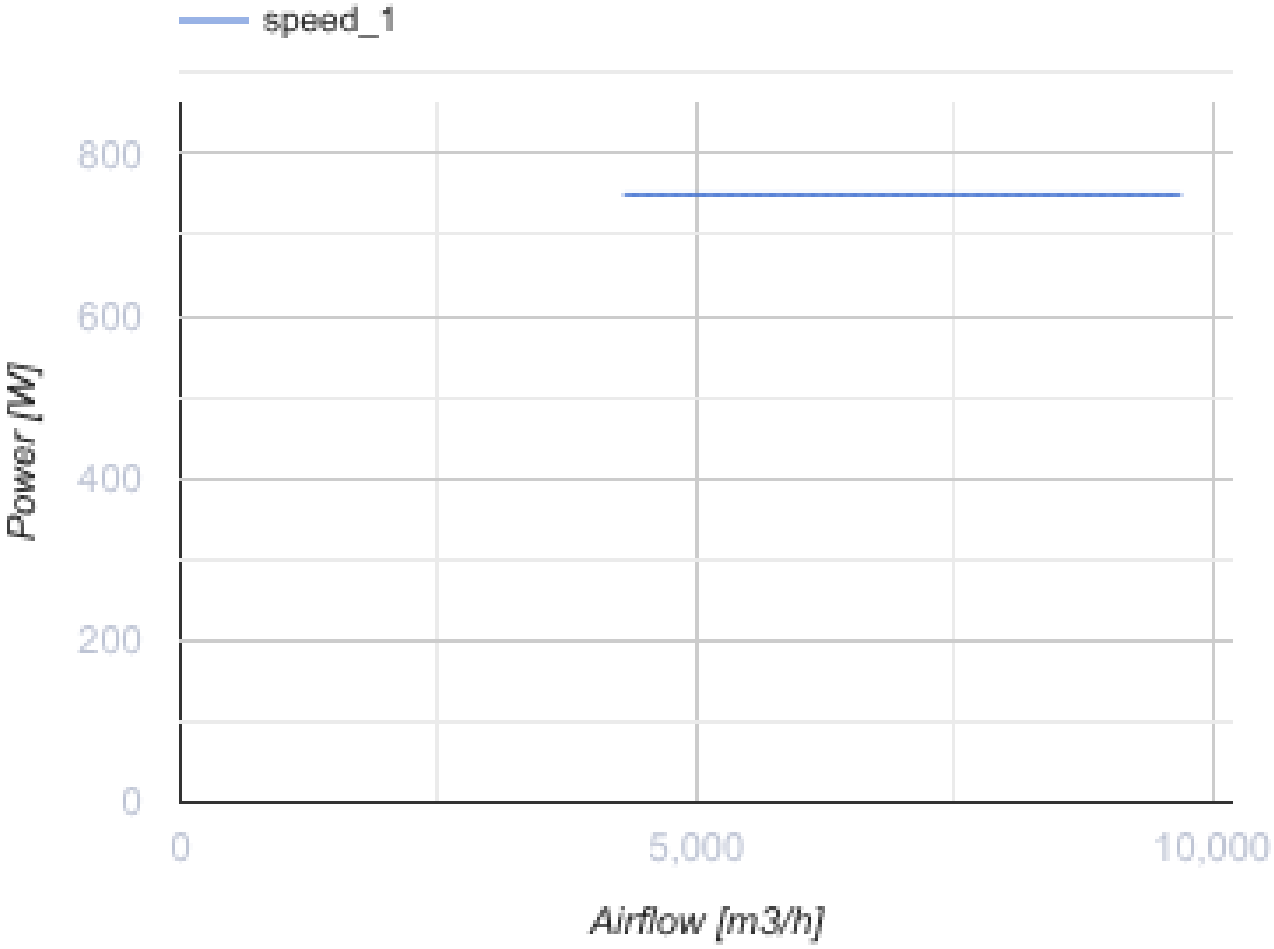

Dimensions

ØD	Ød	B	B1	L
570	11	725	675	260

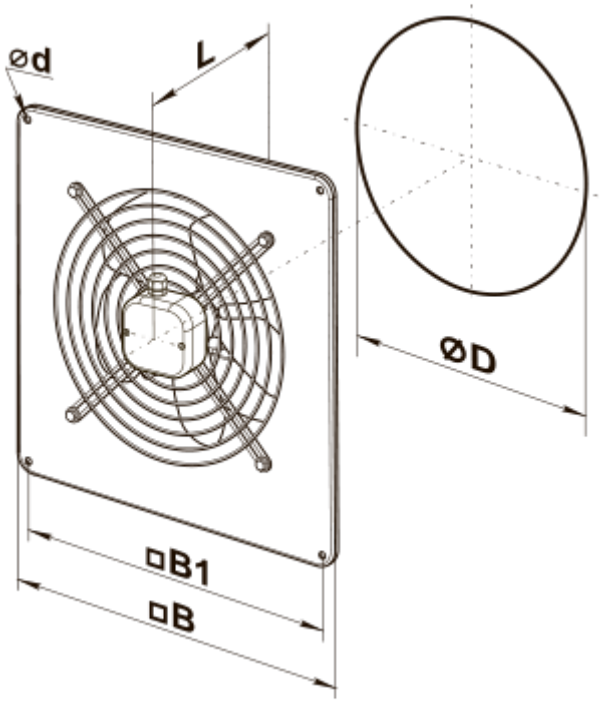
ød
L
ØD
□B1
□B