# OV 6D 500



Wall-mounted axial fans

- Sound pressure level LpA at 3 m: 57
- Impeller type: Axial
- Casing material: Coated steel
- Installation in any position

| | Unit of measurement | OV 6D 500 |
|---|---|---|
| Phases | - | 3 |
| Maximum supply voltage | V | 400 |
| Minimum supply voltage | V | 400 |
| Power supply frequency | Hz | 50 |
| Rated power | W | 230 |
| Unit current | A | 0.58 |
| Maximum airflow | $m^3/h$ | 4900 |
| Sound pressure level LpA at 3 m | dB(A) | 57 |
| Weight | kg | 14 |
| Transported air temperature (max) | °C | 60 |
| Transported air temperature (min) | °C | -30 |
| Ingress protection rating | - | IP24 |
| Ingress protection rating of the drive | - | IP54 |
| Impeller material | - | Coated steel |

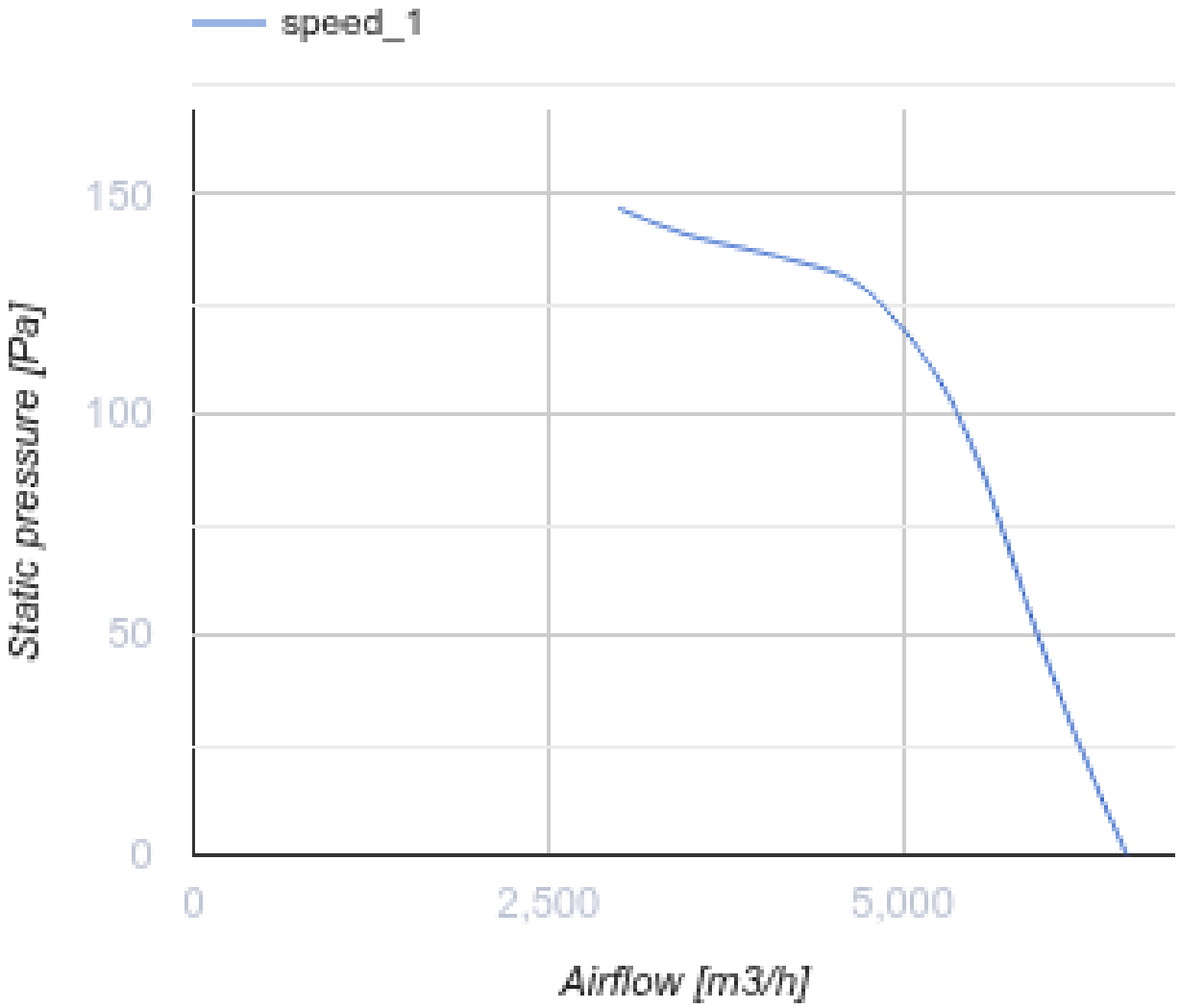
speed_1
150
100
50
0
Static pressure [Pa]
0
2,500
5,000
Airflow [m3/h]

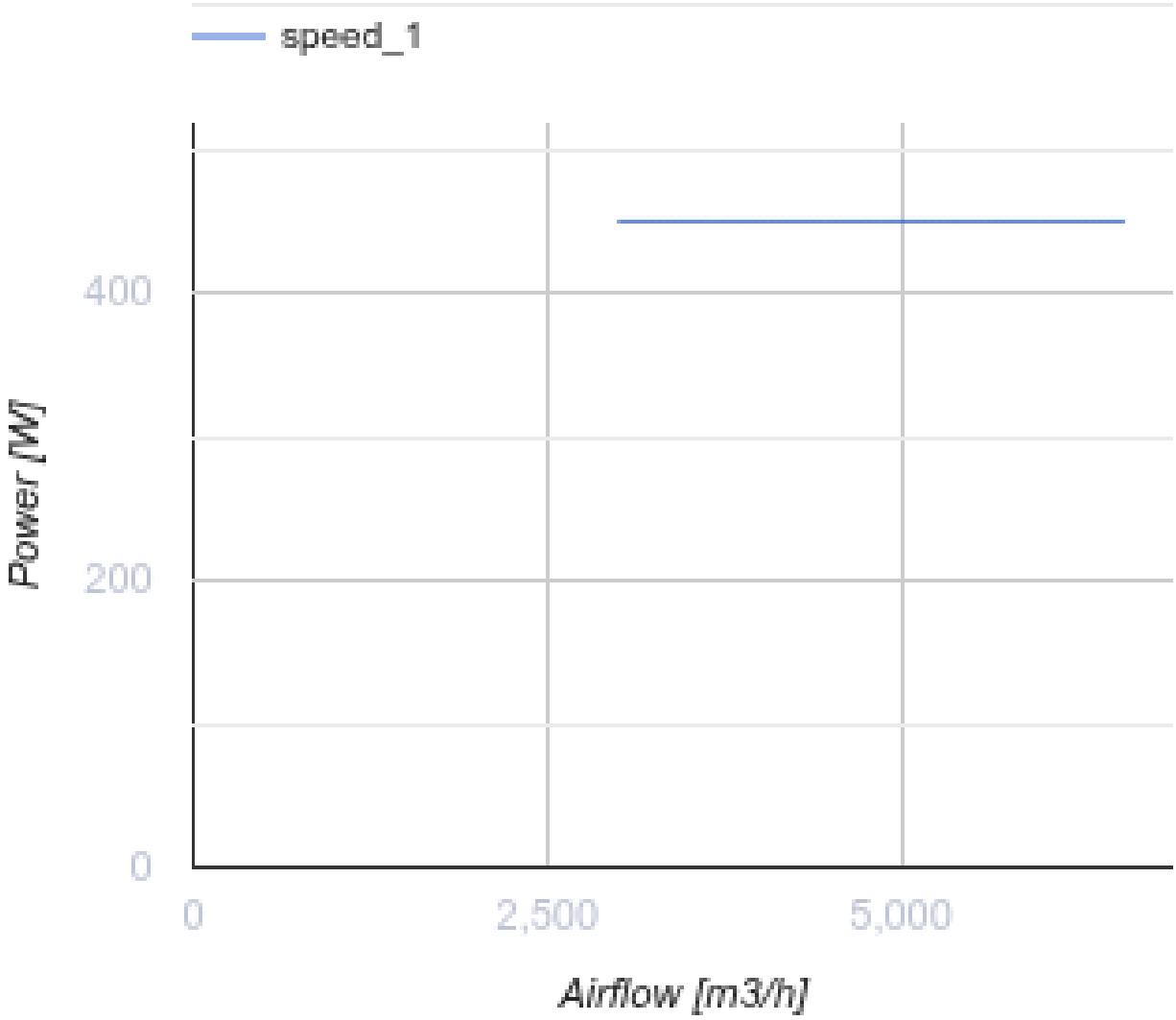


## Dimensions

| ØD | Ød | B | B1 | L |
|---|---|---|---|---|
| 520 | 11 | 655 | 615 | 250 |

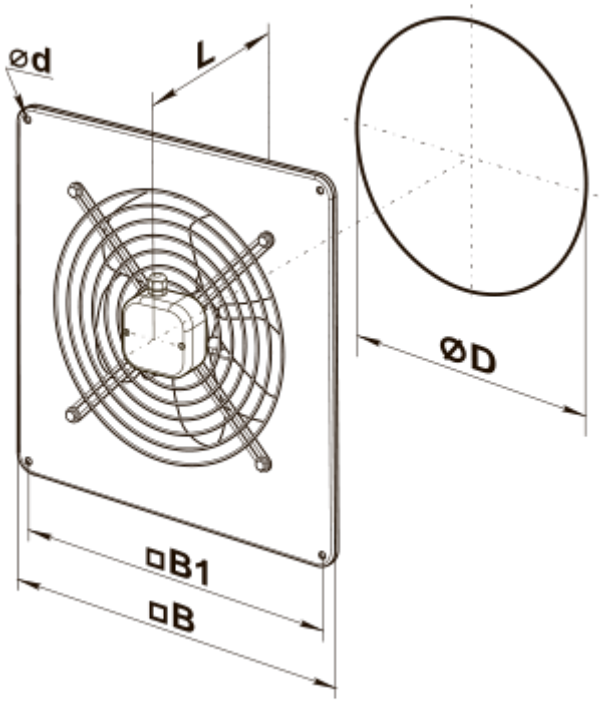
ød
L
ØD
□B1
□B