OV 4E 630



Wall-mounted axial fans

- Sound pressure level LpA at 3 m: 67
- Impeller type: Axial
- Casing material: Coated steel
- Installation in any position

	Unit of measurement	OV 4E 630
Connected air duct size	mm	630
Phases	-	1
Minimum supply voltage	V	220
Maximum supply voltage	V	240
Power supply frequency	Hz	50
Rated power	W	750
Unit current	A	3.5
Maximum airflow	m^3/h	11900
Rotation speed at 50hz	-	1360
Sound pressure level LpA at 3 m	dB(A)	67
Weight	kg	20
Transported air temperature (max)	°C	60
Transported air temperature (min)	°C	-30
Ingress protection rating	-	IP24
Ingress protection rating of the drive	-	IP54
Impeller material	-	Coated steel

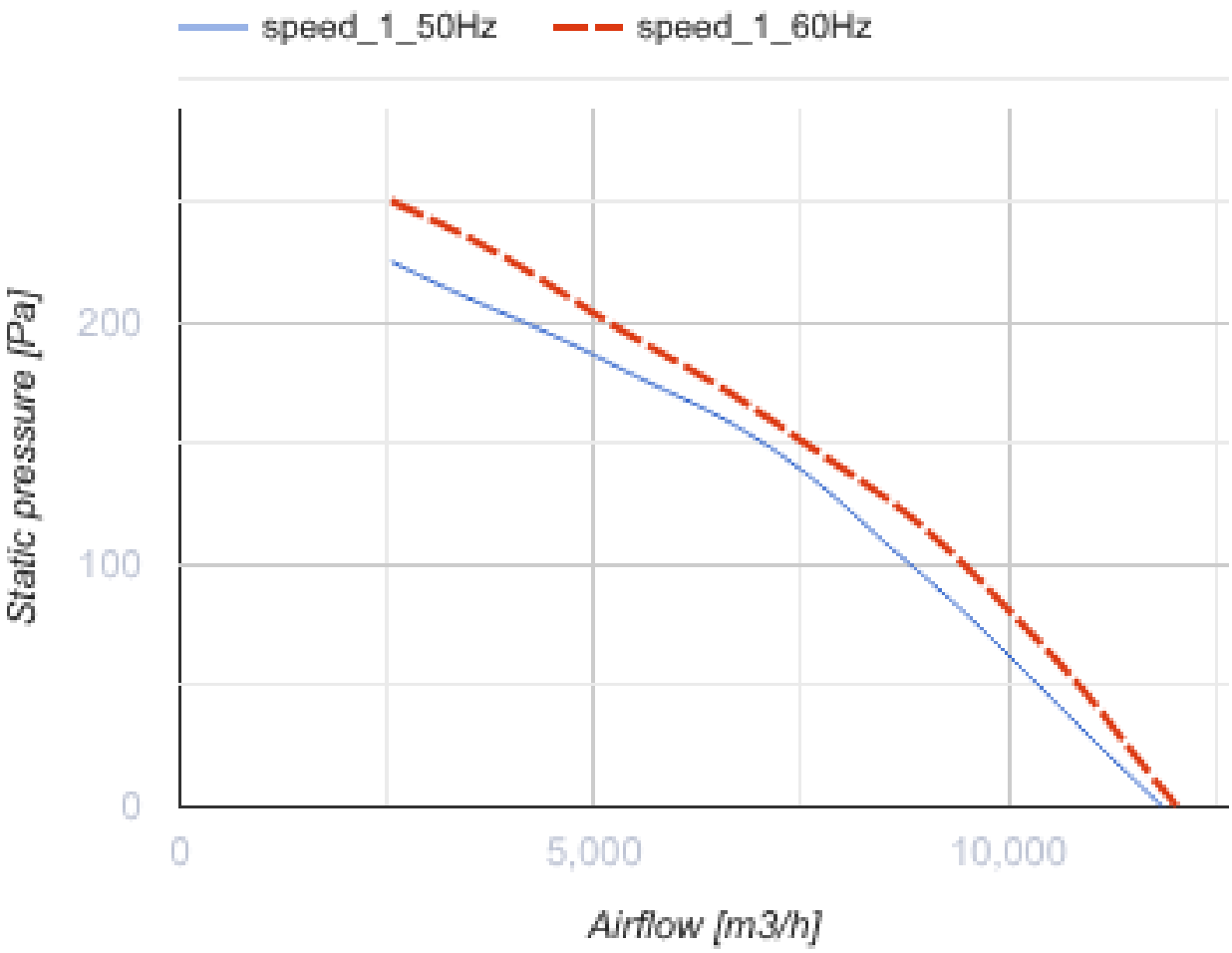
speed_1_50Hz
speed_1_60Hz
Static pressure [Pa]
200
100
0
0
5,000
10,000
Airflow [m3/h]

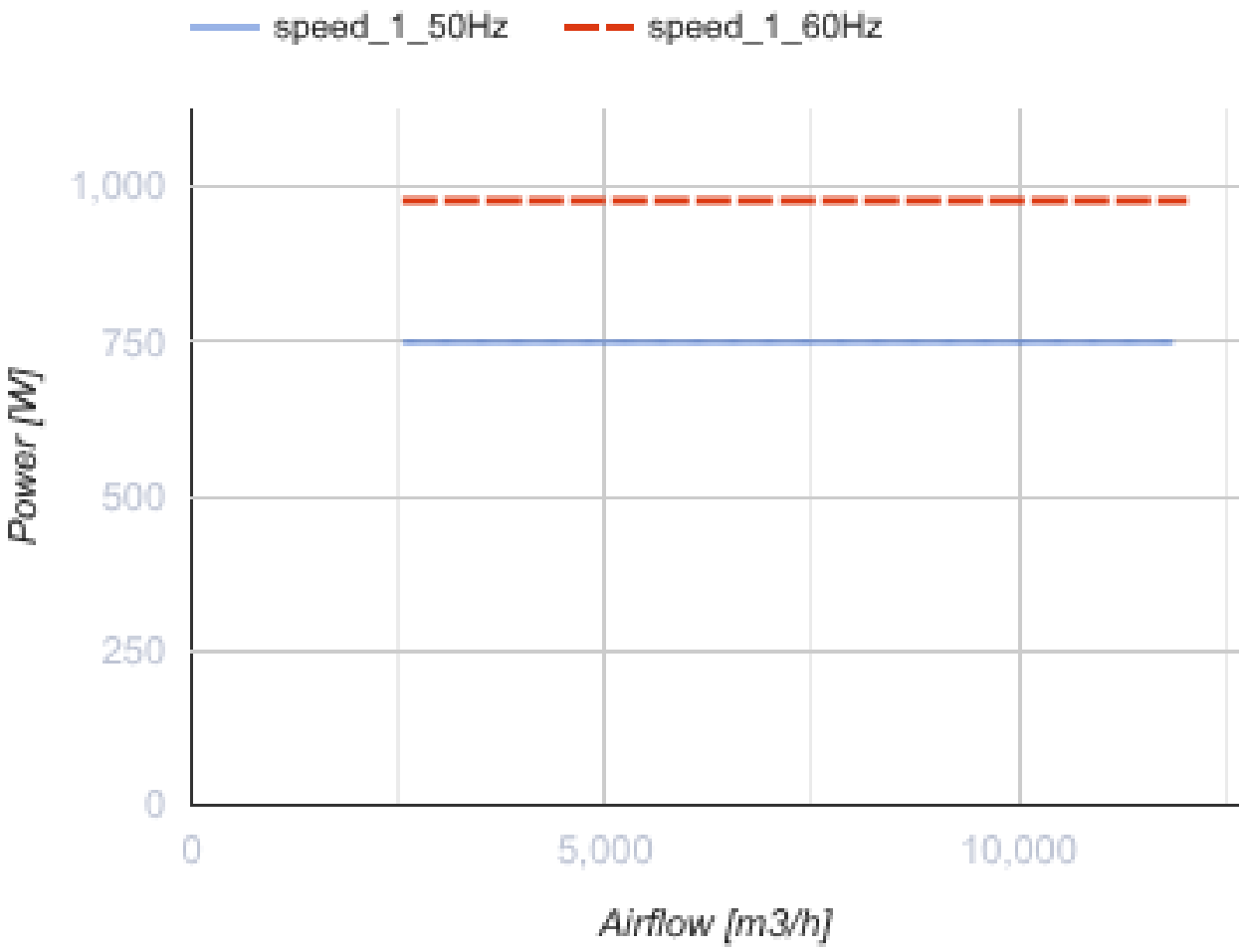

Dimensions

ØD	Ød	B	B1	L
650	11	800	710	275

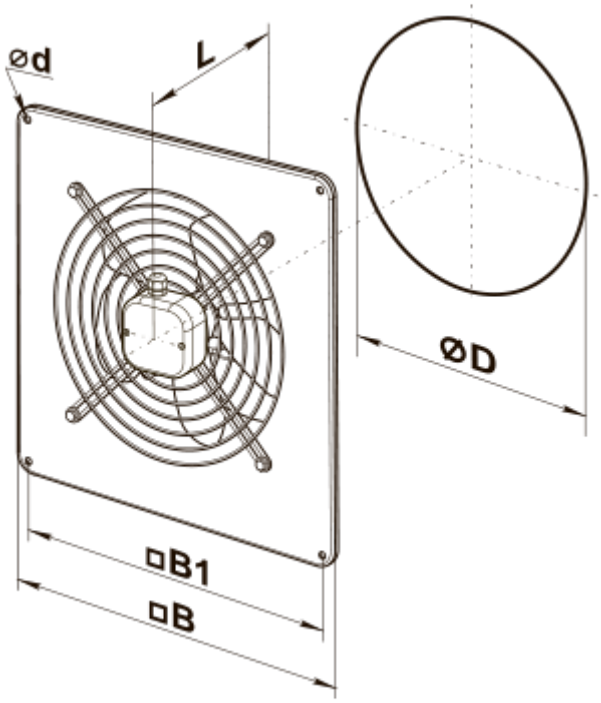
ød
L
ØD
□B1
□B

Ecodesign

Trademark	Vents
Model	OV 4E 630
Type of drive installed	External MSD or VSD
Type of heat recovery system	None
Nominal external pressure (Pa)	149
Maximum external leakage rates (%)	2.7
Static efficiency (%)	37.5
Declared typology	NRVU UVU
Effective electric power input (kW)	0.8
Sound power level (dB(A))	95