OV 4E 630 (220V/60Hz)



Wall-mounted axial fans

- Impeller type: Axial
- Casing material: Coated steel
- Installation in any position

	Unit of measurement	OV 4E 630 (220V/60Hz)
Phases	-	1
Maximum supply voltage	V	240
Minimum supply voltage	V	220
Power supply frequency	Hz	60
Weight	kg	20
Transported air temperature (max)	°C	50
Transported air temperature (min)	°C	-30
Ingress protection rating	-	IP24
Ingress protection rating of the drive	-	IP54
Impeller material	-	Coated steel

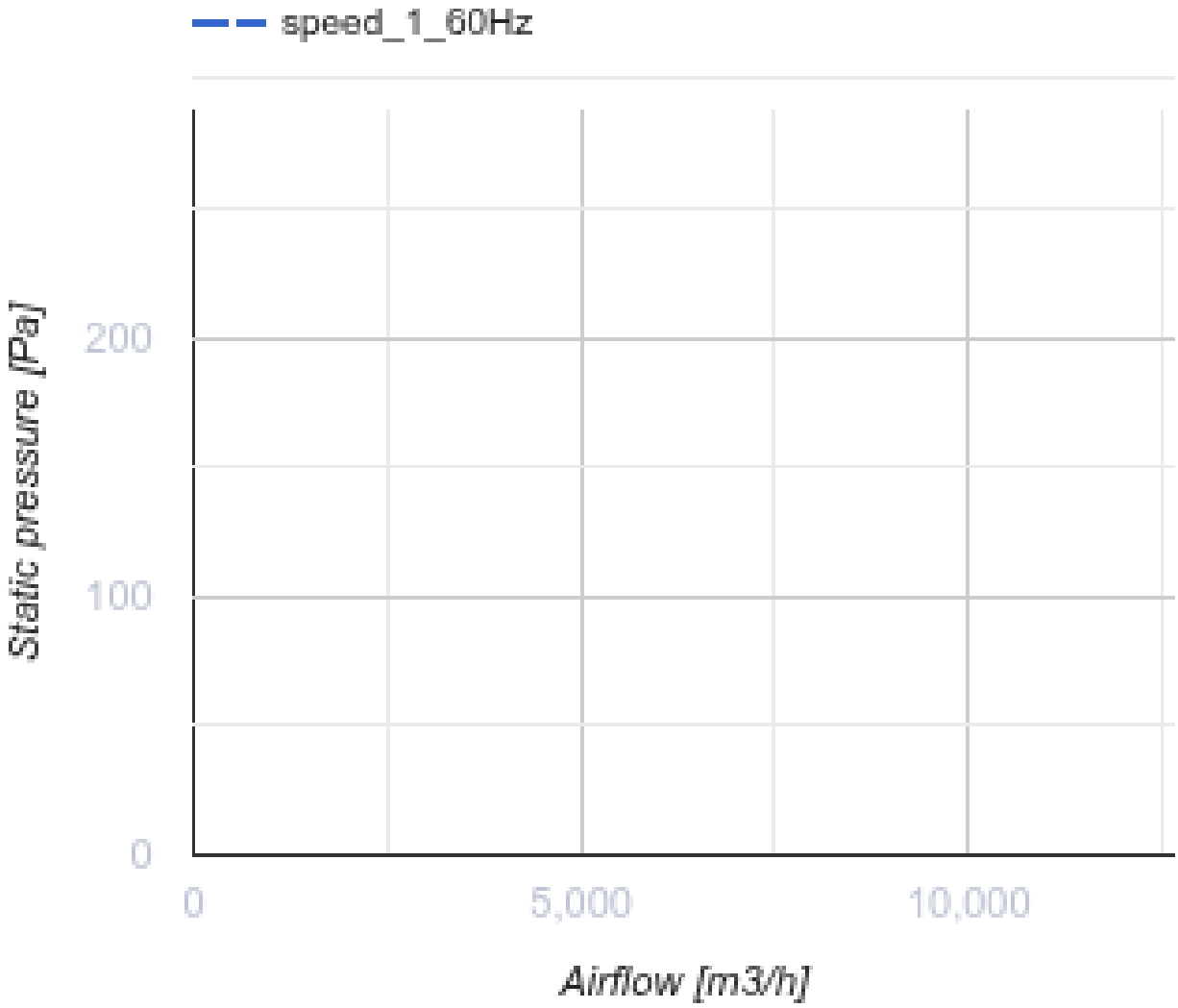
speed_1_60Hz
Static pressure [Pa]
200
100
0
0
5,000
10,000
Airflow [m3/h]

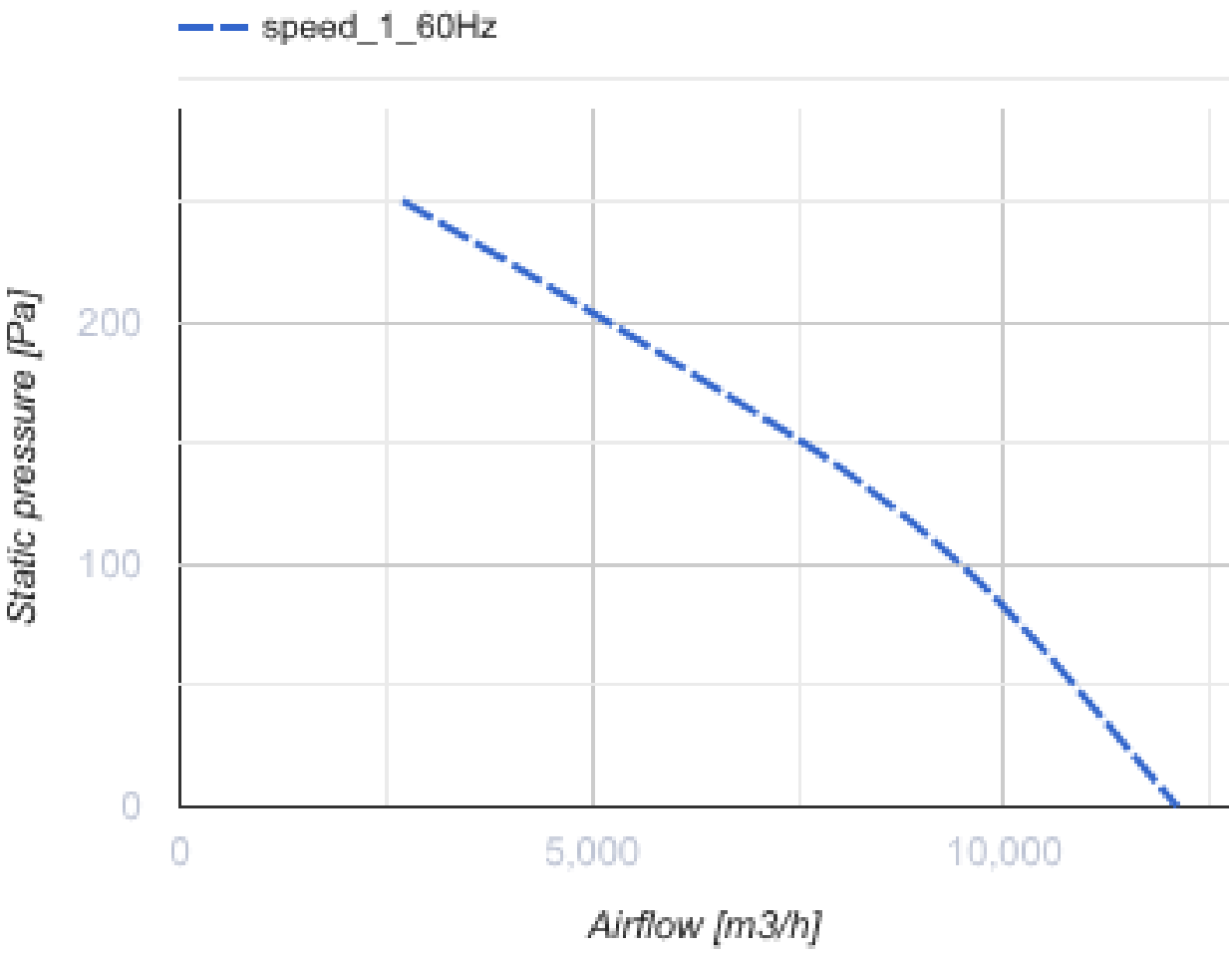
speed_1_60Hz
Static pressure [Pa]
200
100
0
0
5,000
10,000
Airflow [m3/h]

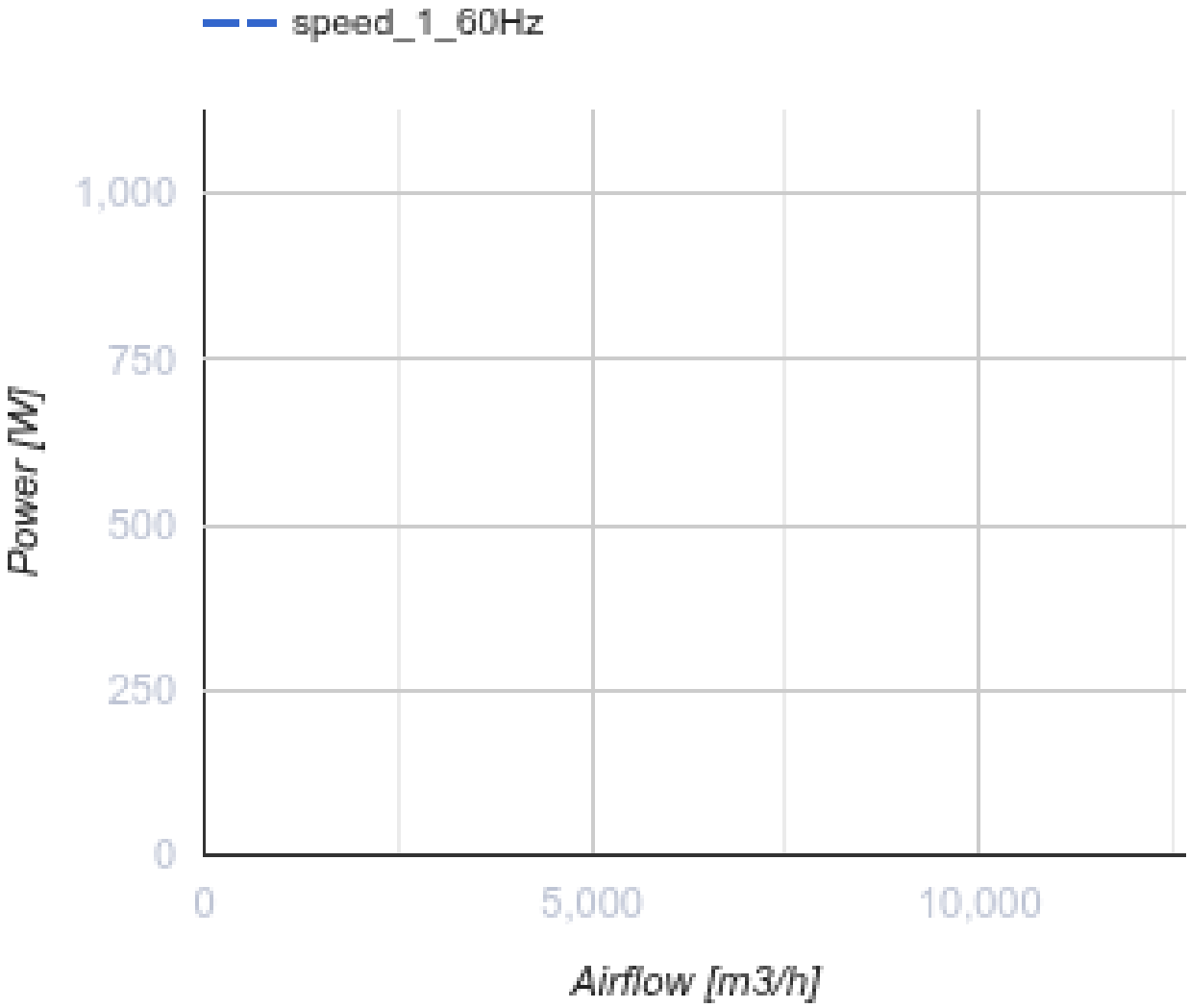

Dimensions

ØD	Ød	B	B1	L
650	11	800	710	275

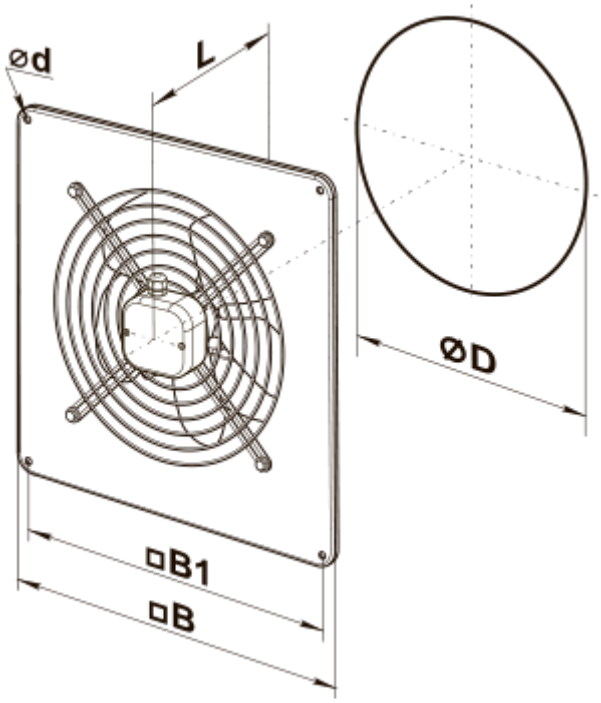
ød
L
ØD
□B1
□B

Ecodesign

Trademark	Vents
Model	OV 4E 630 (220V/60Hz)
Type of drive installed	External MSD or VSD
Type of heat recovery system	None
Nominal external pressure (Pa)	149
Maximum external leakage rates (%)	2.7
Static efficiency (%)	37.5
Effective electric power input (kW)	0.8
Declared typology	NRVU UVU
Sound power level (dB(A))	95