OV 4D 400



Wall-mounted axial fans

- Sound pressure level LpA at 3 m: 54
- Impeller type: Axial
- Casing material: Coated steel
- Installation in any position

	Unit of measurement	OV 4D 400	
Connected air duct size	mm	400	
Phases	-	3	
Maximum supply voltage	V	400	
Minimum supply voltage	V	400	
Power supply frequency	Hz	50	60
Rated power	W	180	
Unit current	A	0.47	
Maximum airflow	m³/h	3740	
Rotation speed at 50hz	-	1380	
Sound pressure level LpA at 3 m	dB(A)	54	
Weight	kg	8.8	
Transported air temperature (max)	°C	60	
Transported air temperature (min)	°C	-30	
Ingress protection rating	-	IP24	
Ingress protection rating of the drive	-	IP54	
Impeller material	-	Coated steel	

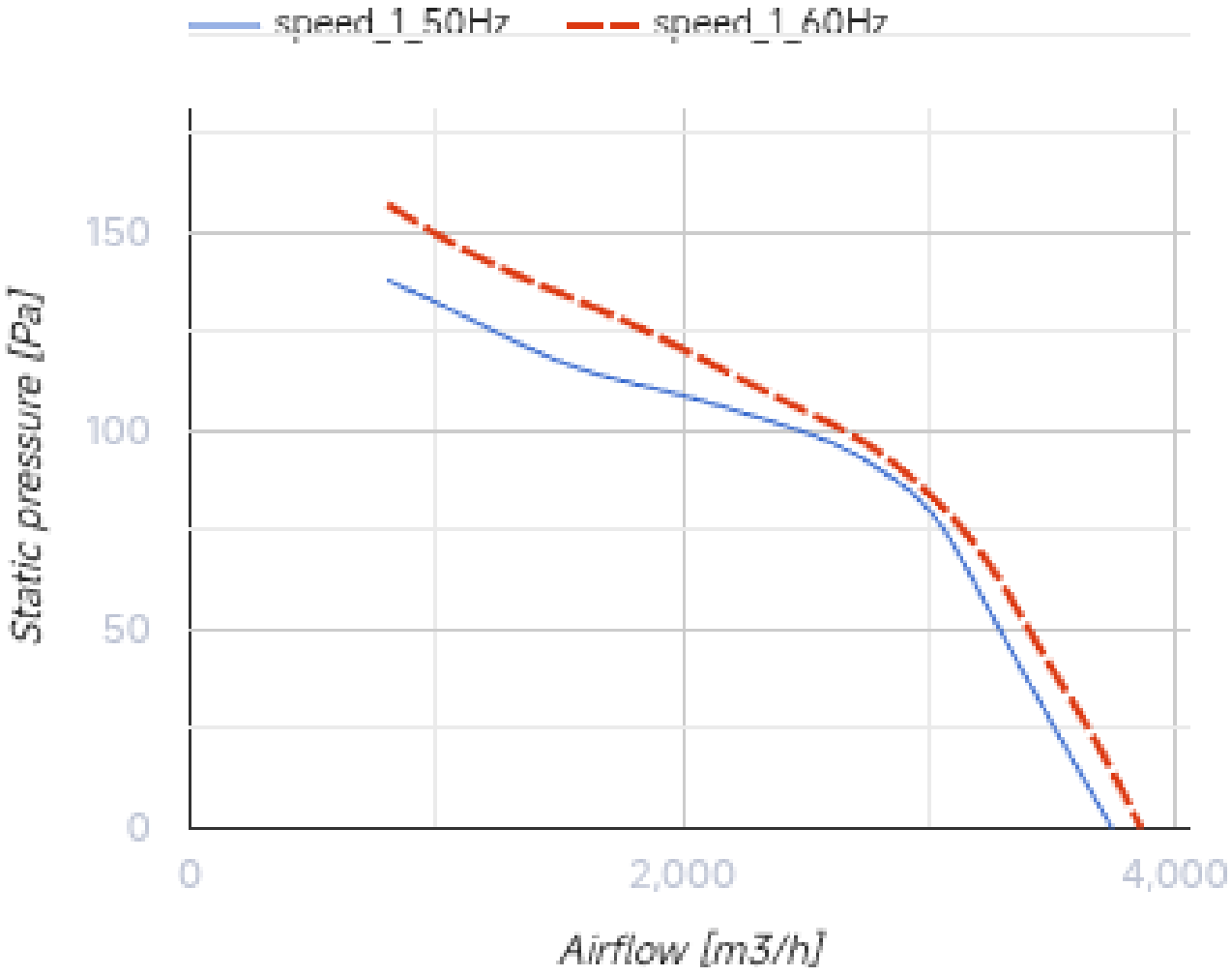
speed_1_50Hz
speed_1_60Hz
Static pressure [Pa]
150
100
50
0
0
2,000
4,000
Airflow [m3/h]

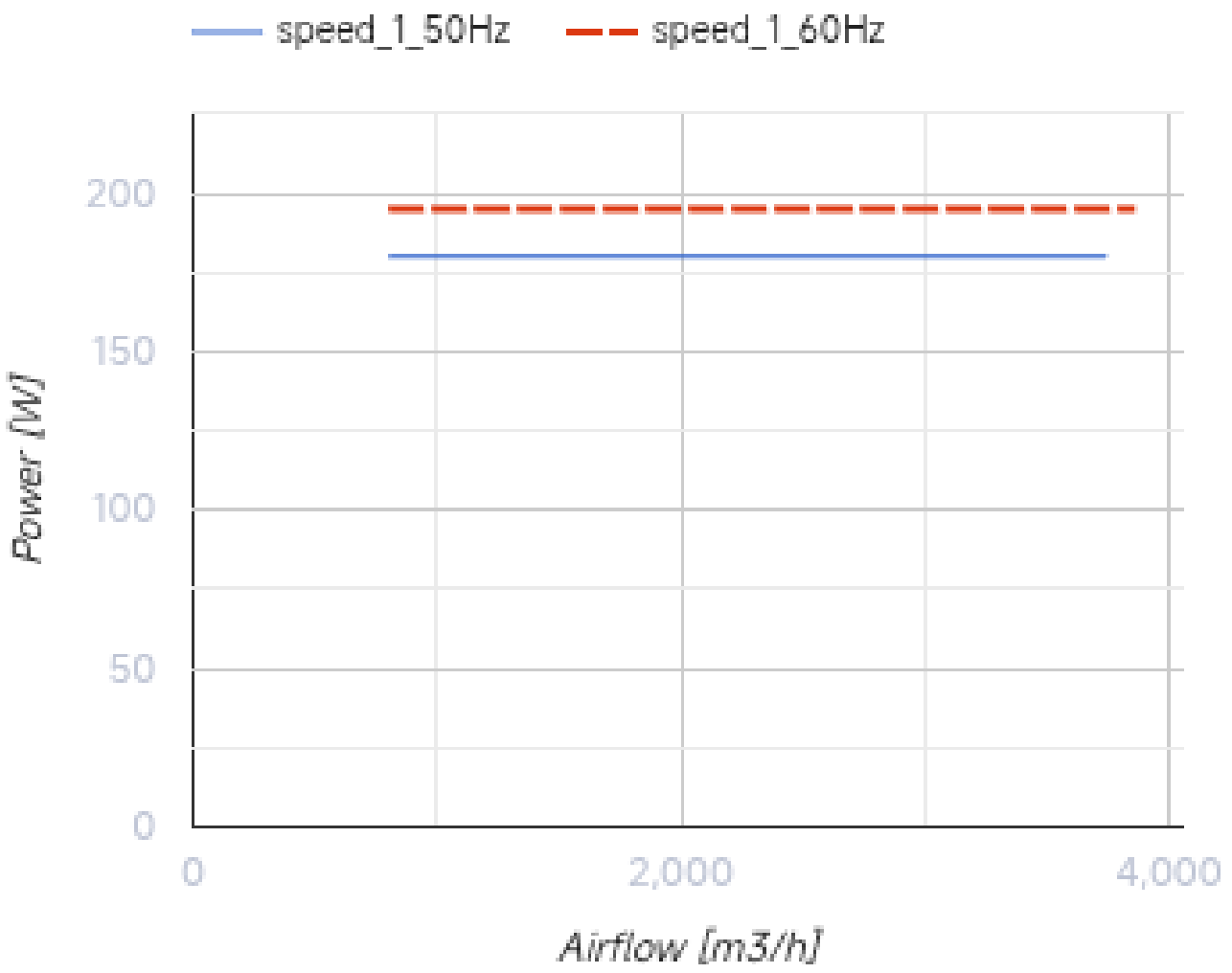

Dimensions

ØD	Ød	B	B1	L
416	9	540	490	220

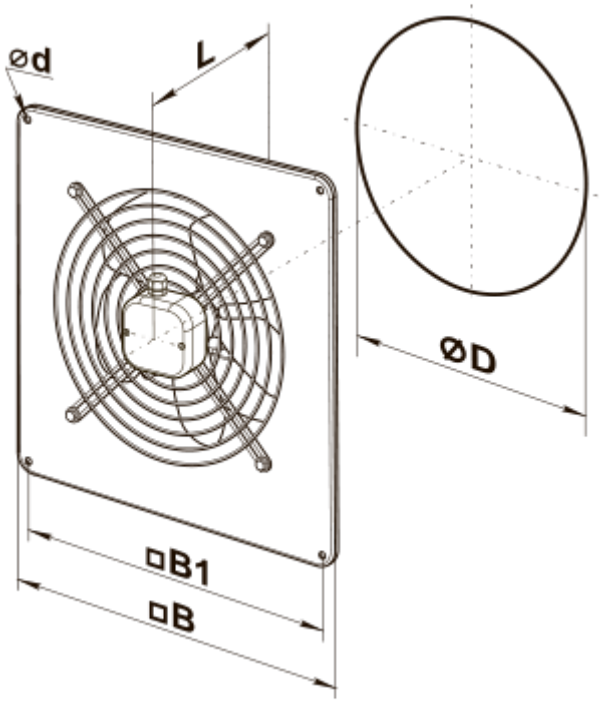
ød
L
ØD
□B1
□B

Ecodesign

Trademark	Vents
Model	OV 4D 400
Type of drive installed	External MSD or VSD
Type of heat recovery system	None
Nominal external pressure (Pa)	90
Maximum external leakage rates (%)	2.7
Static efficiency (%)	34.3
Sound power level (dB(A))	84
Effective electric power input (kW)	0.209
Declared typology	NRVU UVU