# OV 350 EC



Wall-mounted axial fans with EC-motors

- Sound pressure level LpA at 3 m: 58
- Impeller type: Axial
- Casing material: Coated steel

| | Unit of measurement | OV 350 EC |
|---|---|---|
| Connected air duct size | mm | 350 |
| Phases | - | 1 |
| Minimum supply voltage | V | 230 |
| Maximum supply voltage | V | 230 |
| Power supply frequency | Hz | 50/60 |
| Rated power | W | 200 |
| Unit current | A | 1.4 |
| Maximum airflow | m³/h | 3500 |
| Sound pressure level LpA at 3 m | dB(A) | 58 |
| Weight | kg | 4.77 |
| Transported air temperature (max) | °C | 60 |
| Transported air temperature (min) | °C | -25 |
| Ingress protection rating | - | IPX5 |
| Ingress protection rating of the drive | - | IP55 |
| Impeller material | - | Coated steel |

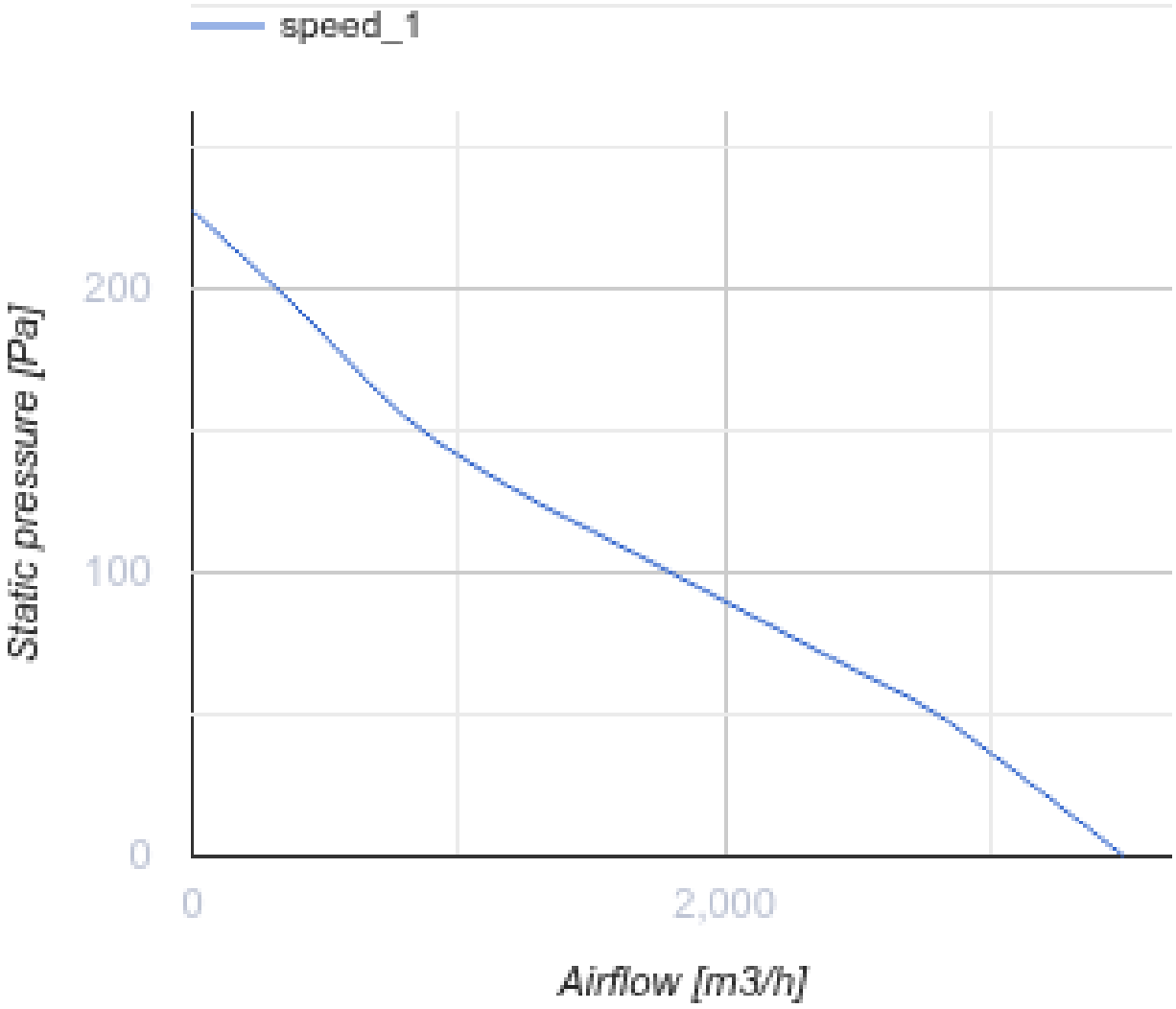


## Dimensions

| ØD | ØD1 | Ød1 | L | L1 | W | W1 |
|---|---|---|---|---|---|---|
| 374 | 420 | 9 | 97 | 157 | 485 | 435 |

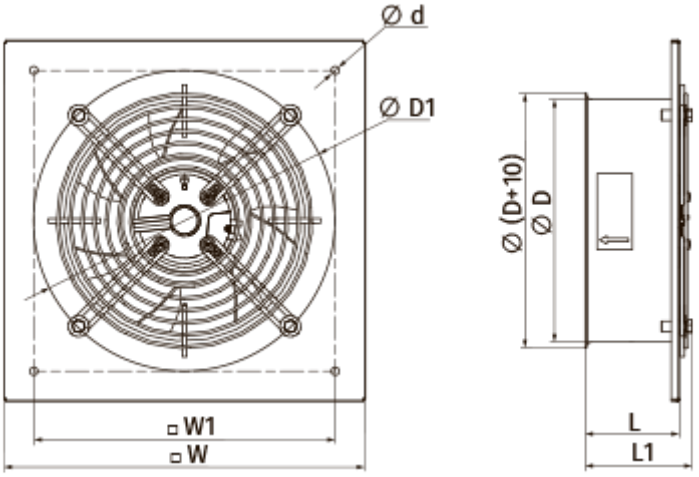


## Accessories

### Speed controllers

| Name | Photo | Description |
|---|---|---|
| R-1/010 |  | Speed controller for EC motors |