OKW 600x300-3

Rectangular inline water coolers

• Casing material: Galvanized steel



	Unit of measurement	OKW 600x300-3
Weight	kg	16

Dimensions

B	B1	B2	H	H1	H2	H3	H4	L	K (inch)
600	620	780	300	320	370	252	134	56	G 3/4

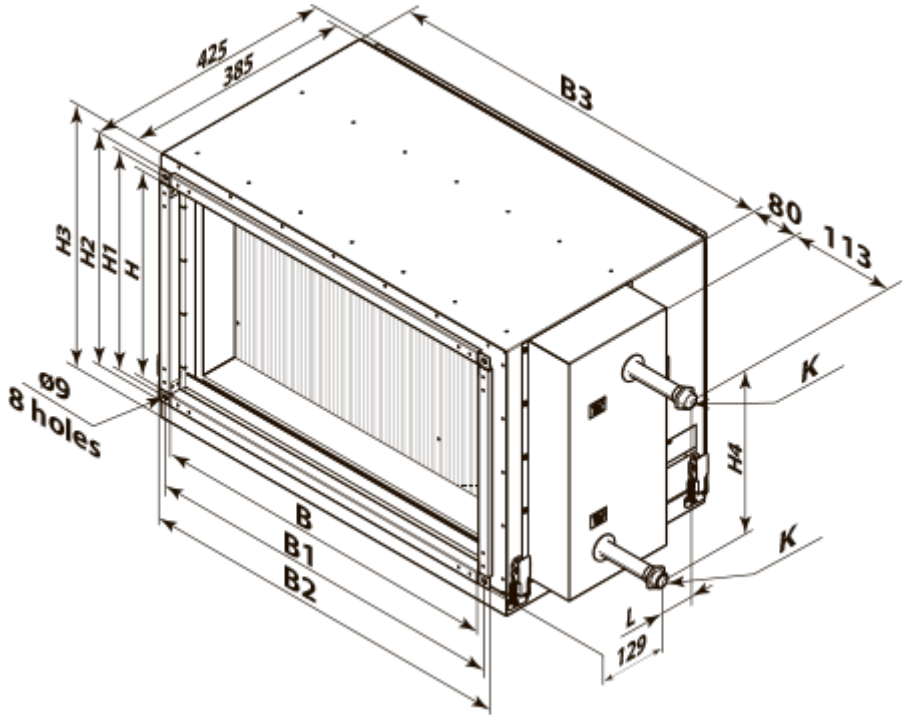
425
385
B3
80
113
H3
H2
H1
H
ø9
8 holes
K
H4
B
B1
B2
K
L
129