# OKW 500x250-3

Rectangular inline water coolers

- Casing material: Galvanized steel



| | Unit of measurement | OKW 500x250-3 |
|---|---|---|
| Weight | kg | 12.8 |

## Dimensions

| B | B1 | B2 | H | H1 | H2 | H3 | H4 | L | K (inch) |
|---|---|---|---|---|---|---|---|---|---|
| 500 | 520 | 680 | 250 | 270 | 320 | 188 | 102 | 45 | G 3/4 |

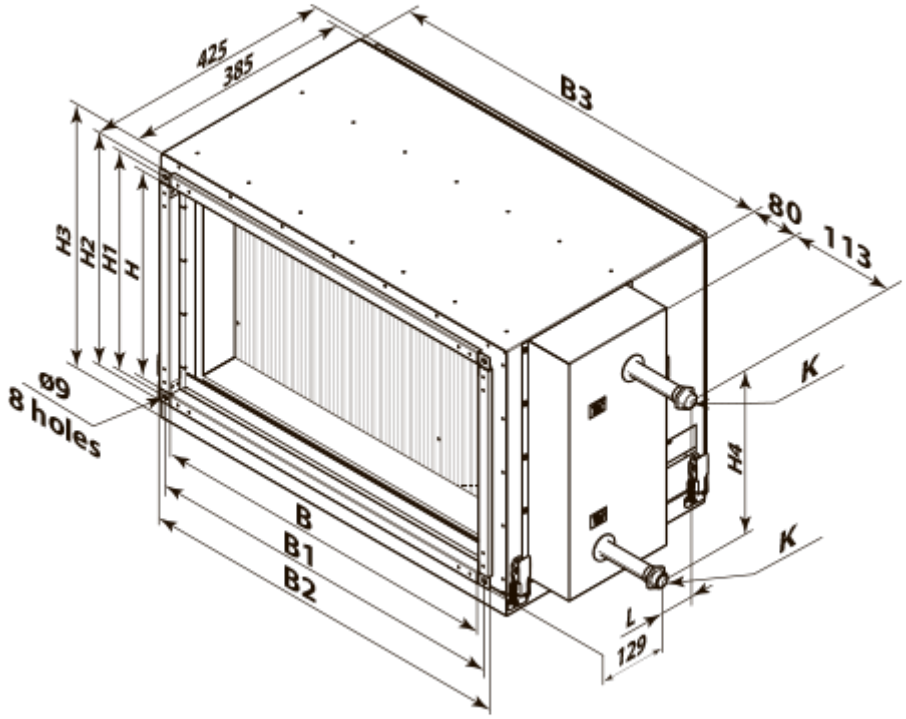
425
385
B3
80
113
H3
H2
H1
H
ø9
8 holes
K
H4
B
B1
B2
K
L
129