OKF1 900x500-3

Rectangular inline direct evaporative coolers

- Casing material: Galvanized steel



	Unit of measurement	OKF1 900x500-3
Weight	kg	23

Dimensions

B	B1	B2	H	H1	H2	H3	L	D1	D2
900	920	1080	500	520	570	340	44	22	28

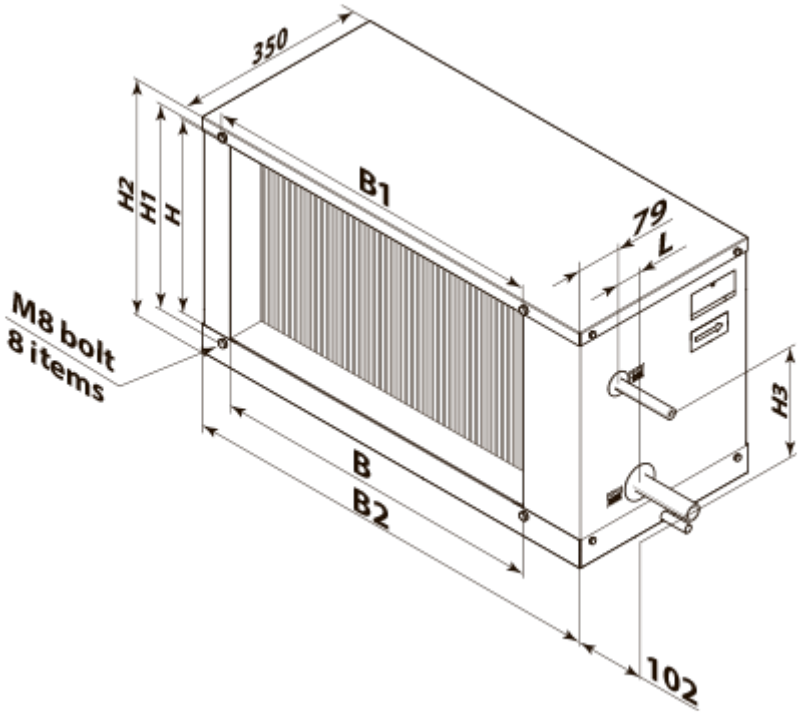
350
H2
H1
H
B1
79
L
M8 bolt
8 items
H3
B
B2
102