OKF1 600x350-3

Rectangular inline direct evaporative coolers

• Casing material: Galvanized steel



	Unit of measurement	OKF1 600x350-3
Weight	kg	17

Dimensions

B	B1	B2	H	H1	H2	H3	L	D1	D2
600	620	780	350	370	420	199	44	18	28

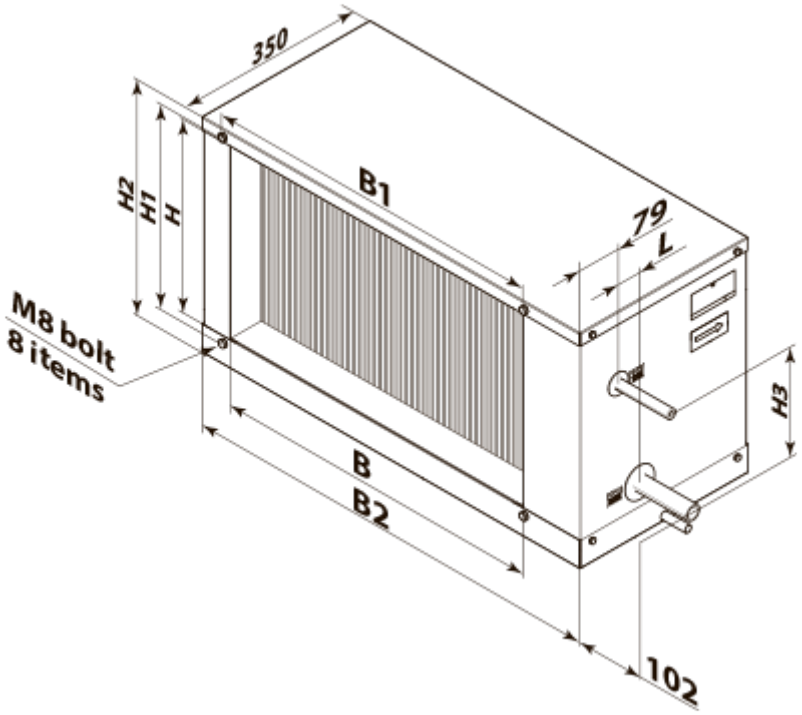
350
H2
H1
H
B1
79
L
M8 bolt
8 items
H3
B
B2
102