OKF1 400x200-3

Rectangular inline direct evaporative coolers

• Casing material: Galvanized steel



	Unit of measurement	OKF1 400x200-3
Weight	kg	13.5

Dimensions

B	B1	B2	H	H1	H2	H3	L	D1	D2
400	420	580	200	220	270	103	44	12	22

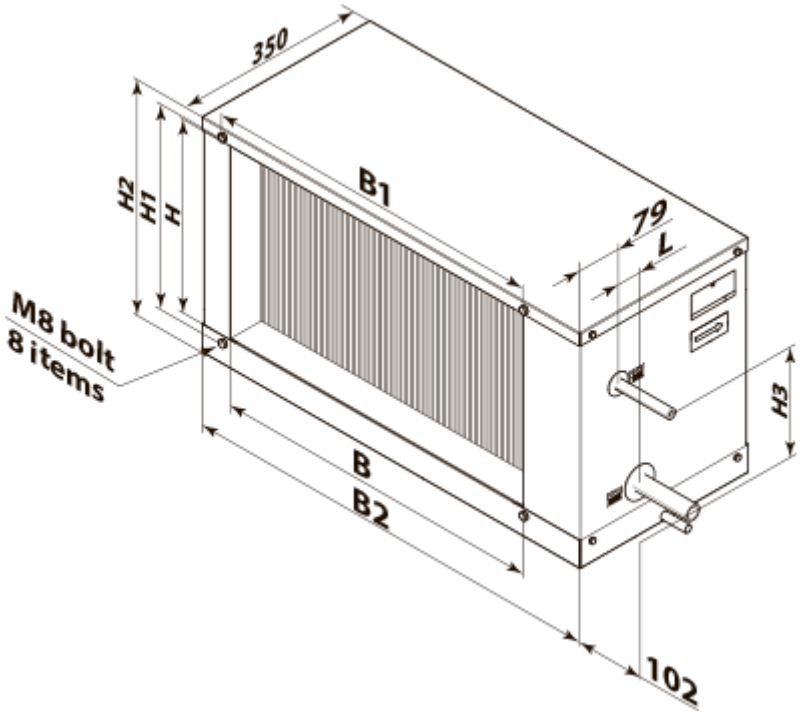
350
H2
H1
H
B1
79
L
M8 bolt
8 items
H3
B
B2
102