OKF 600x300-3

Rectangular inline direct evaporative coolers

• Casing material: Galvanized steel



	Unit of measurement	OKF 600x300-3
Weight	kg	16

Dimensions

B	B1	B2	B3	H	H1	H2	H3	H4	L	D1	D2
600	620	640	670	300	320	340	395	199	44	18	28

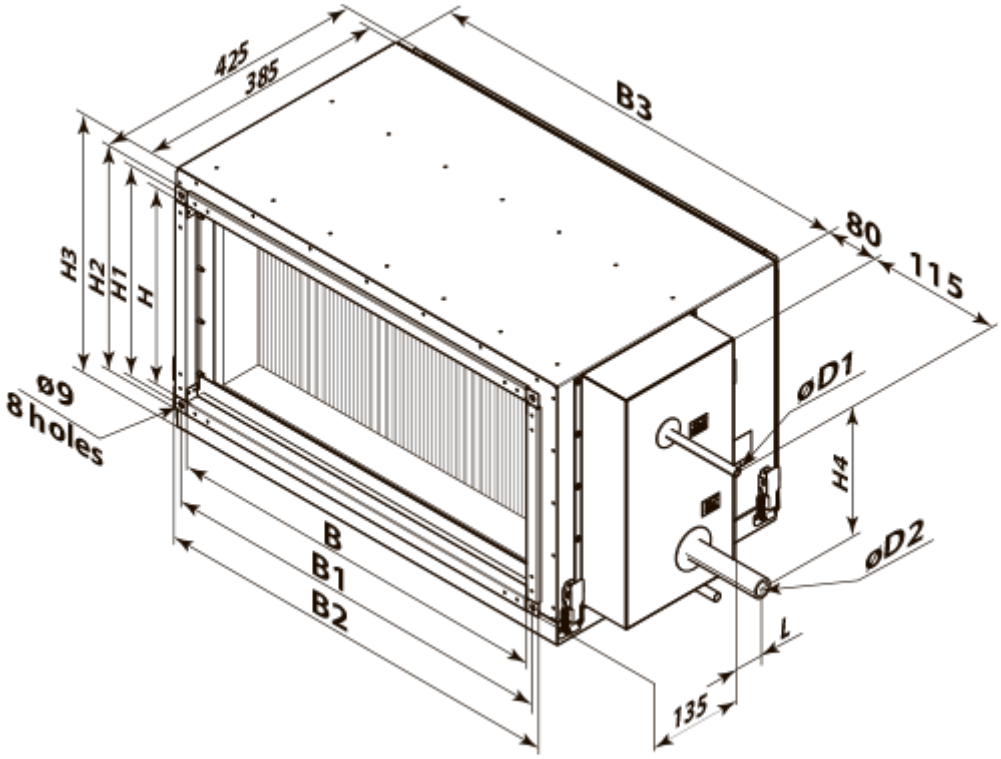
425
385
B3
80
115
H3
H2
H1
H
ø9
8holes
øD1
H4
øD2
B
B1
B2
L
135