OKF 500x250-3

Rectangular inline direct evaporative coolers

• Casing material: Galvanized steel



	Unit of measurement	OKF 500x250-3
Weight	kg	12.8

Dimensions

B	B1	B2	B3	H	H1	H2	H3	H4	L	D1	D2
500	520	540	570	250	270	290	345	155	44	12	22

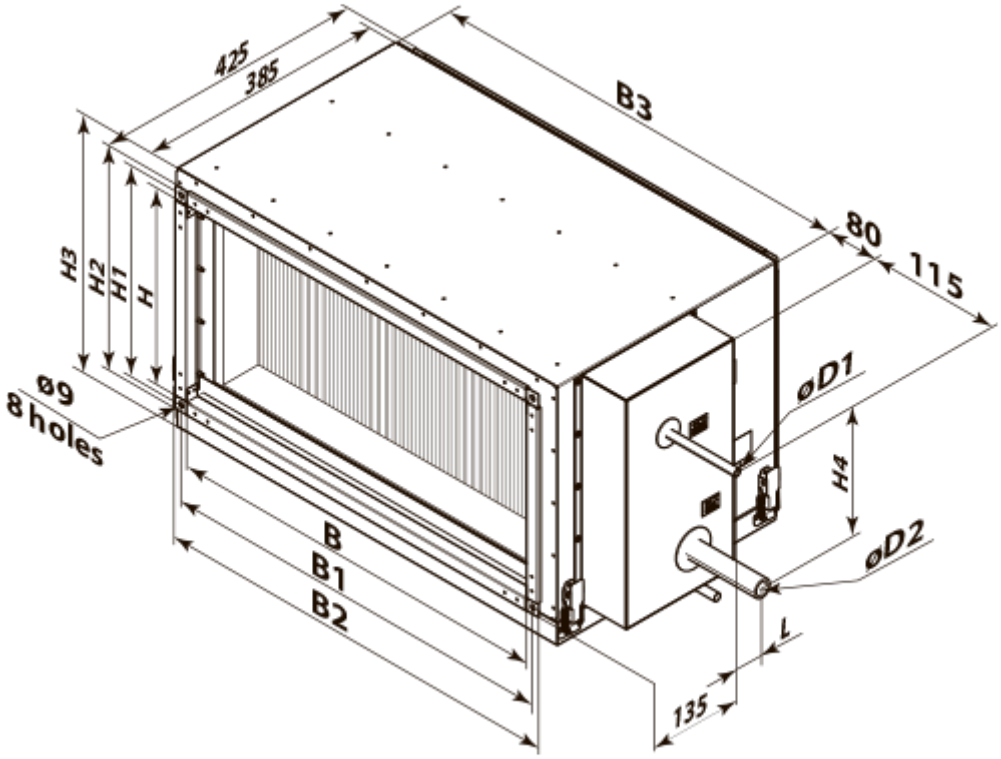
425
385
B3
80
115
H3
H2
H1
H
ø9
8holes
øD1
H4
øD2
B
B1
B2
L
135