# NKV 700x400-2

Inline water supply air heaters or heater for air handling units with a rectangular cross-section

- Casing material: Galvanized steel



| | Unit of measurement | NKV 700x400-2 |
|---|---|---|
| Weight | kg | 27.8 |

## Dimensions

| B | B1 | B2 | B3 | H | H1 | H2 | H3 | L | L1 | L2 | K |
|---|---|---|---|---|---|---|---|---|---|---|---|
| 700 | 720 | 740 | 865 | 400 | 420 | 440 | 350 | 200 | 36 | 47 | G 1'' |

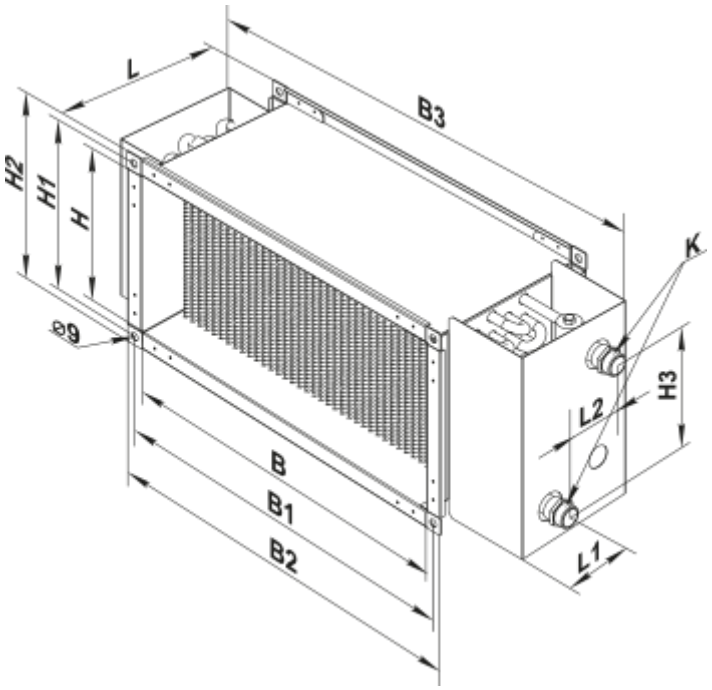
L
B3
H2
H1
H
K
Ø9
H3
L2
B
B1
B2
L1