NKV 600x350-2

Inline water supply air heaters or heater for air handling units with a rectangular cross-section

- Casing material: Galvanized steel



	Unit of measurement	NKV 600x350-2
Weight	kg	22.4

Dimensions

B	B1	B2	B3	H	H1	H2	H3	L	L1	L2	K
600	620	640	765	350	370	390	300	200	43	43	G 1''

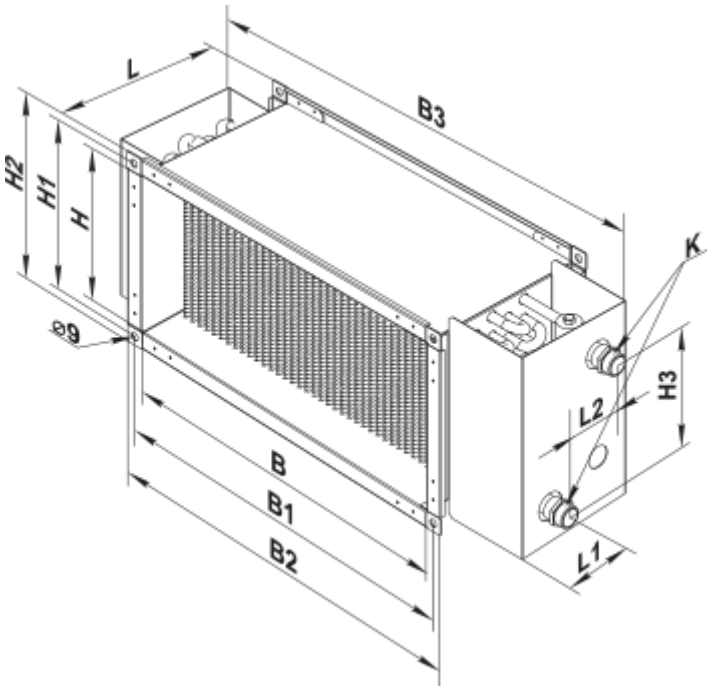
L
B3
H2
H1
H
K
Ø9
H3
L2
B
B1
B2
L1