# NKV 500x250-2

Inline water supply air heaters or heater for air handling units with a rectangular cross-section

- Casing material: Galvanized steel



| | Unit of measurement | NKV 500x250-2 |
|---|---|---|
| Weight | kg | 15.8 |

## Dimensions

| B | B1 | B2 | B3 | H | H1 | H2 | H3 | L | L1 | L2 | K |
|---|---|---|---|---|---|---|---|---|---|---|---|
| 500 | 520 | 540 | 665 | 250 | 270 | 290 | 200 | 200 | 43 | 43 | G 3/4'' |

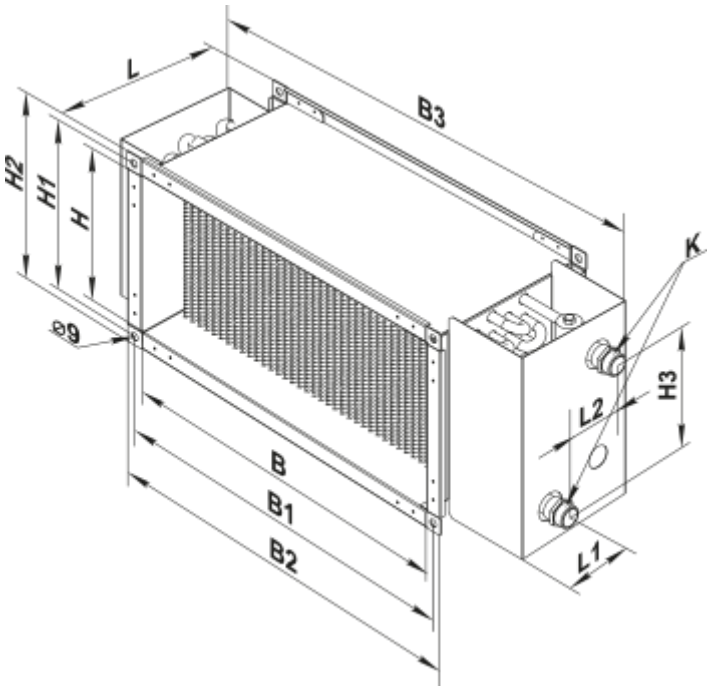
L
B3
H2
H1
H
K
Ø9
H3
L2
B
B1
B2
L1