# NKP 150-2,0-1



Inline heaters for heat exchanger frost protection

• Casing material: Galvanized steel

| | Unit of measurement | NKP 150-2,0-1 |
|---|---|---|
| Connected air duct size | mm | 150 |
| Phases | - | 1 |
| Minimum supply voltage | V | 230 |
| Maximum supply voltage | V | 230 |
| Power supply frequency | Hz | 50/60 |
| Rated power | W | 2000 |

## Dimensions

| Ø D | B | H | L | L1 |
|---|---|---|---|---|
| 149 | 170 | 282 | 306 | 190 |

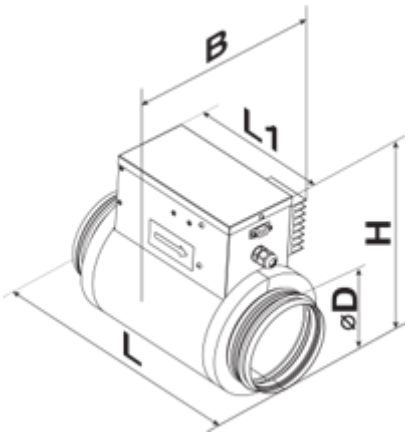
B
L1
H
ØD
L