NKD 160-2,0-1 A21

Inline supply air reheaters with external control

• Casing material: Galvanized steel

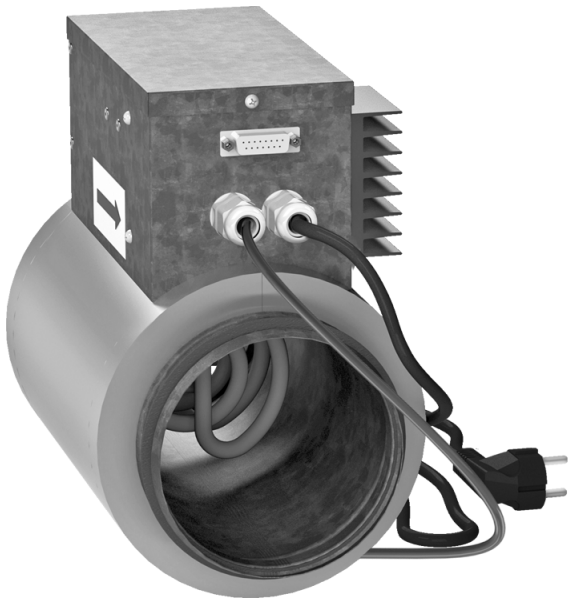

	Unit of measurement	NKD 160-2,0-1 A21
Connected air duct size	mm	160
Phases	-	1
Minimum supply voltage	V	230
Maximum supply voltage	V	230
Power supply frequency	Hz	50/60
Rated power	W	2000

Dimensions

ØD	B	H	L	L1
159	175	293	306	190

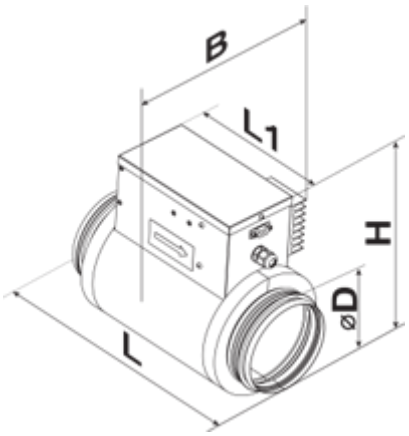
B
L1
H
ØD
L