NK H2V2 900x600



Ventilation combined grille with unregulated vanes

• Casing material: Plastic

	Unit of measurement	NK H2V2 900x600

Dimensions

H	L	h	l
630	930	616	619

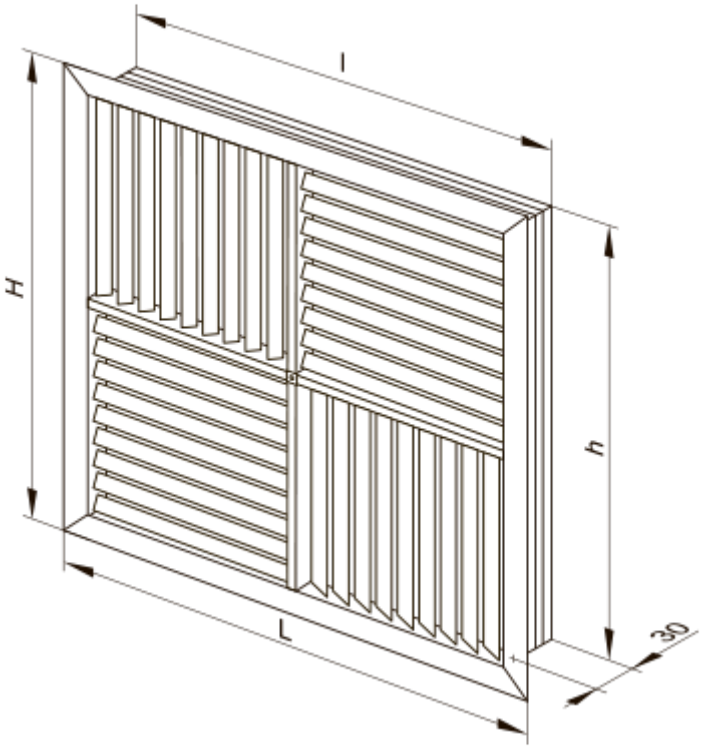
l
H
h
L
30