NK 600x350-12,0-3 U

Rectangular electric inline heaters with control unit

- Casing material: Galvanized steel



	Unit of measurement	NK 600x350-12,0-3 U
Phases	-	3
Minimum supply voltage	V	400
Maximum supply voltage	V	400
Power supply frequency	Hz	50
Rated power	W	12000
Weight	kg	28.2

Dimensions

B	B1	B2	H	H1	H2	L
600	620	802	350	370	390	228

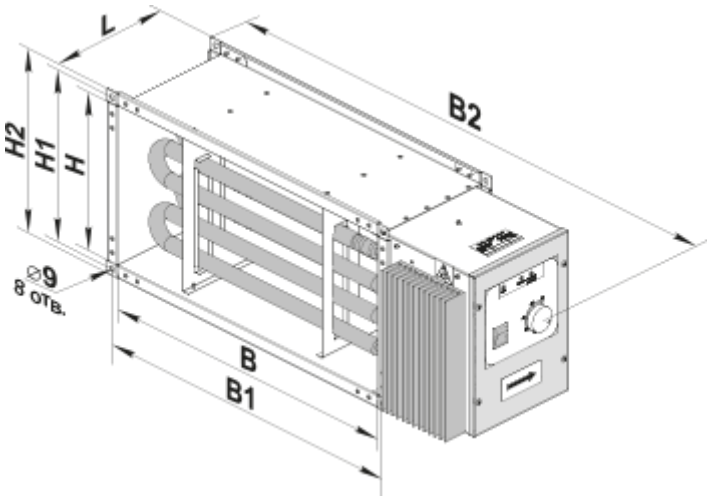

Accessories

Outdoor temperature sensors

Name	Photo	Description
KDT2-M 100		Duct temperature sensors
KDT2-M 150		Duct temperature sensors
KDT2-M 200		Duct temperature sensors
KDT2-M 400		Duct temperature sensors
KDT2-M1 100		Duct temperature sensors
KDT2-M1 150		Duct temperature sensors
KDT2-M1 200		Duct temperature sensors
KDT2-M1 400		Duct temperature sensors
KDT2-MK 100		Duct temperature sensors with a terminal box

KDT2-MK 150		Duct temperature sensors with a terminal box
KDT2-MK 200		Duct temperature sensors with a terminal box
KDT2-MK 400		Duct temperature sensors with a terminal box