# NK 500x250-15,0-3 U

Rectangular electric inline heaters with control unit

- Casing material: Galvanized steel



| | Unit of measurement | NK 500x250-15,0-3 U |
|---|---|---|
| Phases | - | 3 |
| Minimum supply voltage | V | 400 |
| Maximum supply voltage | V | 400 |
| Power supply frequency | Hz | 50 |
| Rated power | W | 15000 |
| Weight | kg | 23.1 |

## Dimensions

| B | B1 | B2 | H | H1 | H2 | L |
|---|---|---|---|---|---|---|
| 500 | 520 | 702 | 250 | 270 | 290 | 228 |

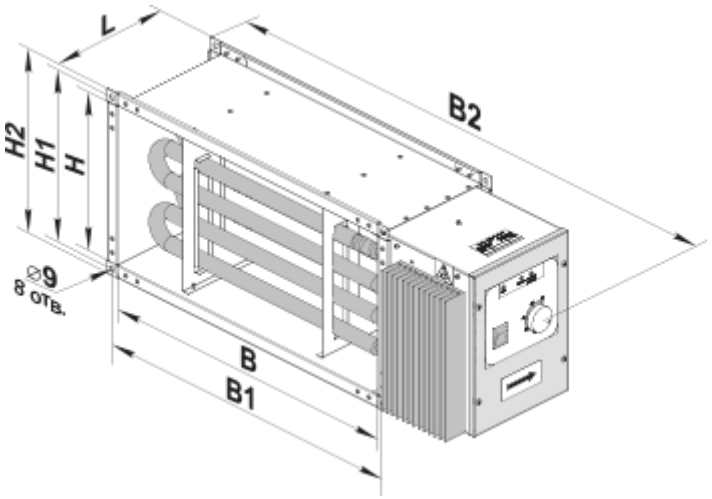


## Accessories

### Outdoor temperature sensors

| Name | Photo | Description |
|---|---|---|
| KDT2-M 100 |  | Duct temperature sensors |
| KDT2-M 150 |  | Duct temperature sensors |
| KDT2-M 200 |  | Duct temperature sensors |
| KDT2-M 400 |  | Duct temperature sensors |
| KDT2-M1 100 |  | Duct temperature sensors |
| KDT2-M1 150 |  | Duct temperature sensors |
| KDT2-M1 200 |  | Duct temperature sensors |
| KDT2-M1 400 |  | Duct temperature sensors |
| KDT2-MK 100 |  | Duct temperature sensors with a terminal box |

| | | |
|---|---|---|
| KDT2-MK 150 |  | Duct temperature sensors with a terminal box |
| KDT2-MK 200 |  | Duct temperature sensors with a terminal box |
| KDT2-MK 400 |  | Duct temperature sensors with a terminal box |