# NK 400x200-4,5-3

Rectangular electric inline heaters

- Casing material: Galvanized steel

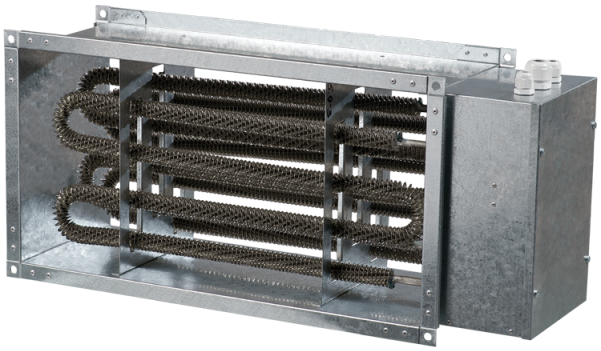

| | Unit of measurement | NK 400x200-4,5-3 |
|---|---|---|
| Phases | - | 3 |
| Minimum supply voltage | V | 400 |
| Maximum supply voltage | V | 400 |
| Power supply frequency | Hz | 50 |
| Rated power | W | 4500 |
| Weight | kg | 6.5 |

## Dimensions

| B | B1 | B2 | H | H1 | H2 | L |
|---|---|---|---|---|---|---|
| 400 | 420 | 540 | 200 | 220 | 240 | 200 |

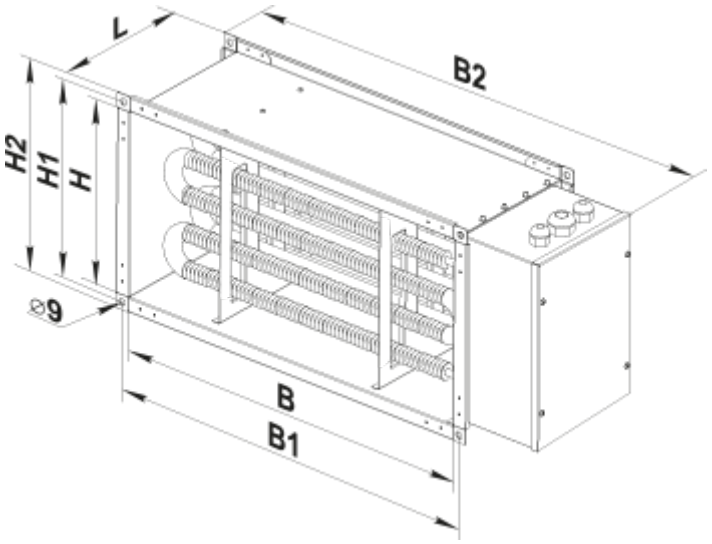


## Accessories

### Outdoor temperature sensors

| Name | Photo | Description |
|---|---|---|
| KDT2-M 100 |  | Duct temperature sensors |
| KDT2-M 150 |  | Duct temperature sensors |
| KDT2-M 200 |  | Duct temperature sensors |
| KDT2-M 400 |  | Duct temperature sensors |
| KDT2-M1 100 |  | Duct temperature sensors |
| KDT2-M1 150 |  | Duct temperature sensors |
| KDT2-M1 200 |  | Duct temperature sensors |
| KDT2-M1 400 |  | Duct temperature sensors |
| KDT2-MK 100 |  | Duct temperature sensors with a terminal box |

| | | |
|---|---|---|
| KDT2-MK 150 |  | Duct temperature sensors with a terminal box |
| KDT2-MK 200 |  | Duct temperature sensors with a terminal box |
| KDT2-MK 400 |  | Duct temperature sensors with a terminal box |

### Electric triac temperature controllers

| Name | Photo | Description |
|---|---|---|
| RNS-16 |  | TRIAC power controller for electric heaters |
| RNS-25 |  | TRIAC power controller for electric heaters |