MVMPO 450x250/4s gray

Multiple-row flanged metal grilles with angled louvers

- Casing material: Coated steel
- Options for grilles: Insect screen



	Unit of measurement	MVMPO 450x250/4s gray

Dimensions

L	H	l	h	A
450	250	436	236	5.5

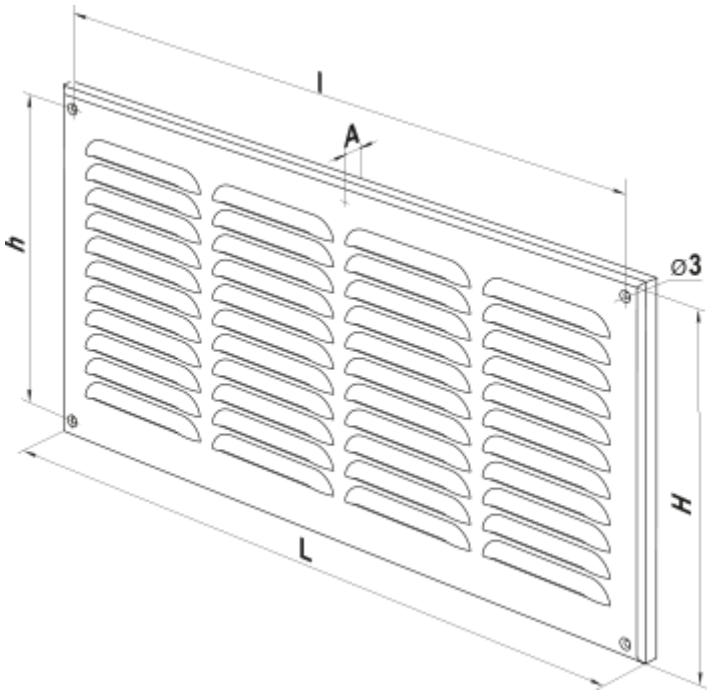
l
A
h
ø3
H
L