# MVMPO 305x500/3



Multiple-row flanged metal grilles with angled louvers

- Casing material: Coated steel

| | Unit of measurement | MVMPO 305x500/3 |
|---|---|---|

## Dimensions

| L | H | l | h | A |
|---|---|---|---|---|
| 305 | 500 | 291 | 486 | 5.5 |

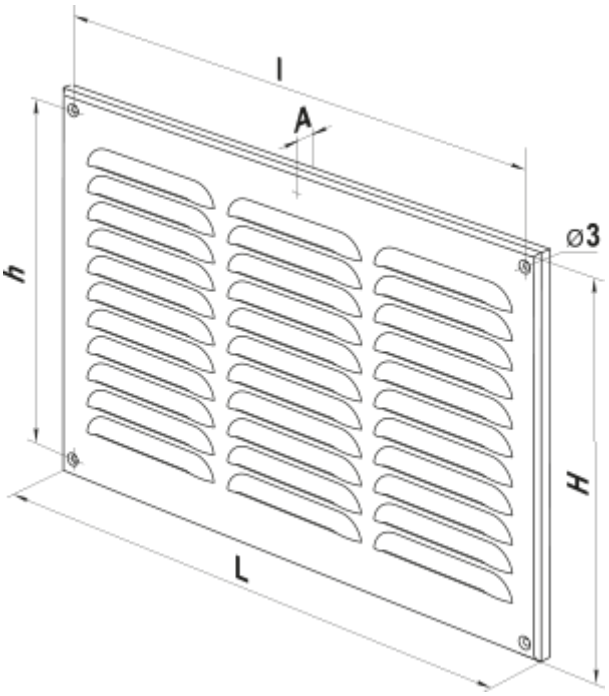
l
A
h
⌀3
H
L