# MVMPO 200x300 R



Single-row flanged metal grilles with straight louvers, adjustable

- Casing material: Steel
- Options for grilles: Air flow regulator

| | Unit of measurement | MVMPO 200x300 R |
|---|---|---|

## Dimensions

| L | H | l | h | A |
|---|---|---|---|---|
| 200 | 300 | 182 | 282 | 9 |

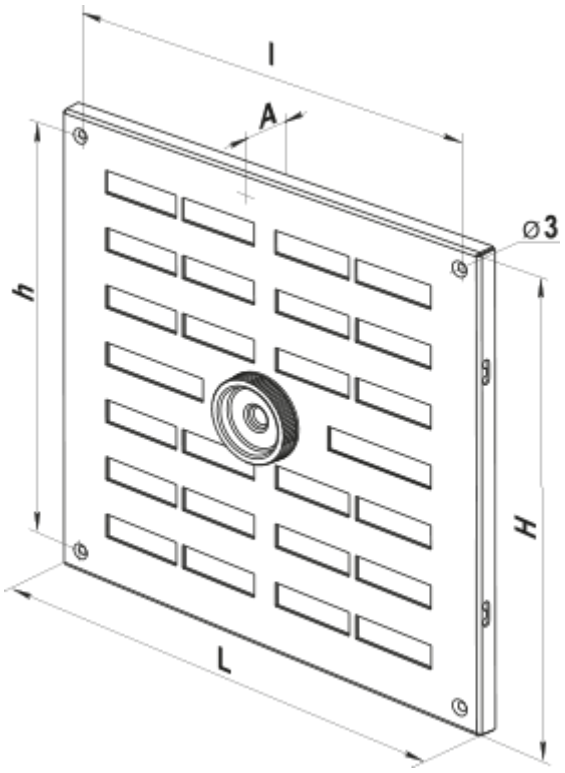
l
A
⌀3
h
H
L