# MVMPO 200x300/2



Multiple-row flanged metal grilles with angled louvers

- Casing material: Coated steel

| | Unit of measurement | MVMPO 200x300/2 |
|---|---|---|

## Dimensions

| L | H | l | h | A |
|---|---|---|---|---|
| 200 | 300 | 186 | 286 | 5.5 |

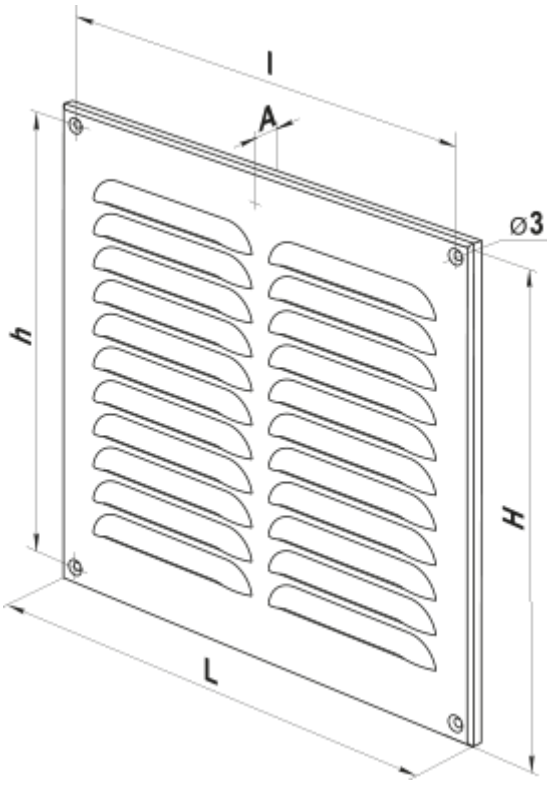
l
A
ø3
h
H
L