# MVMPO 150x200 R



Single-row flanged metal grilles with straight louvers, adjustable

- Casing material: Steel
- Options for grilles: Air flow regulator

| | Unit of measurement | MVMPO 150x200 R |
|---|---|---|

## Dimensions

| L | H | l | h | A |
|---|---|---|---|---|
| 150 | 200 | 132 | 182 | 9 |

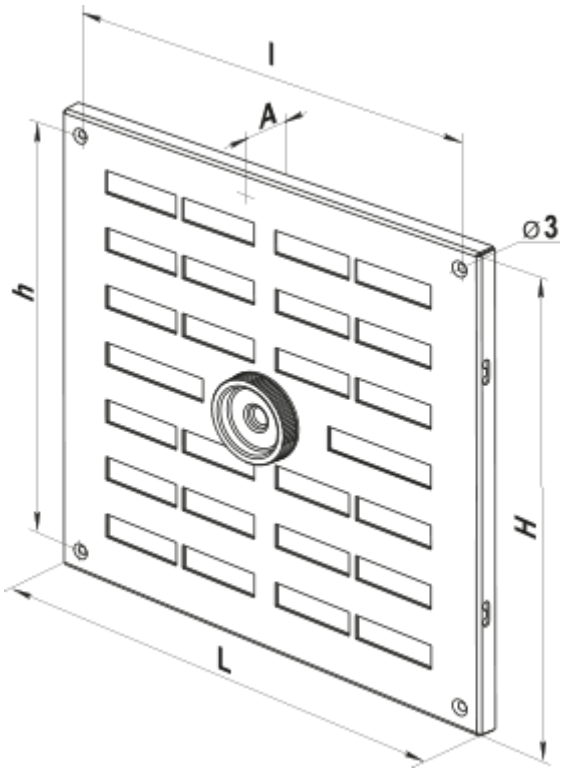
l
A
⌀3
h
H
L