MVMP 70x140s Zn VM

Single-row metal grilles with angled louvers

- Casing material: Galvanized steel
- Options for grilles: Insect screen

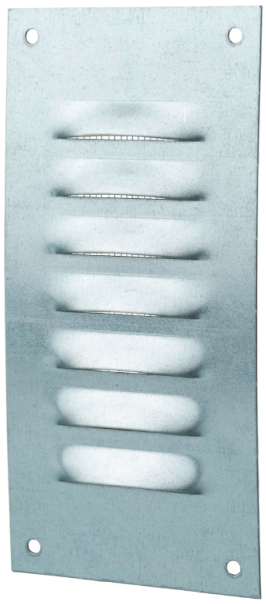

	Unit of measurement	MVMP 70x140s Zn VM

Dimensions

L	H	l	h	A
70	140	56	126	0.8

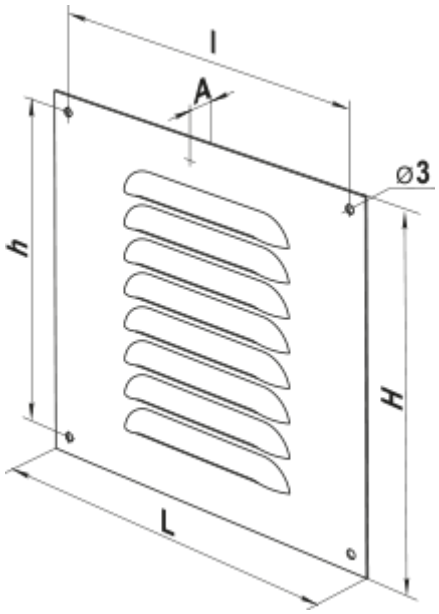
l
A
⌀3
h
H
L