MVMP 300x210/3



Multiple-row metal grilles with angled louvers, multiple-row

• Casing material: Coated steel

	Unit of measurement	MVMP 300x210/3

Dimensions

L	H	l	h	A
300	210	286	196	0.8

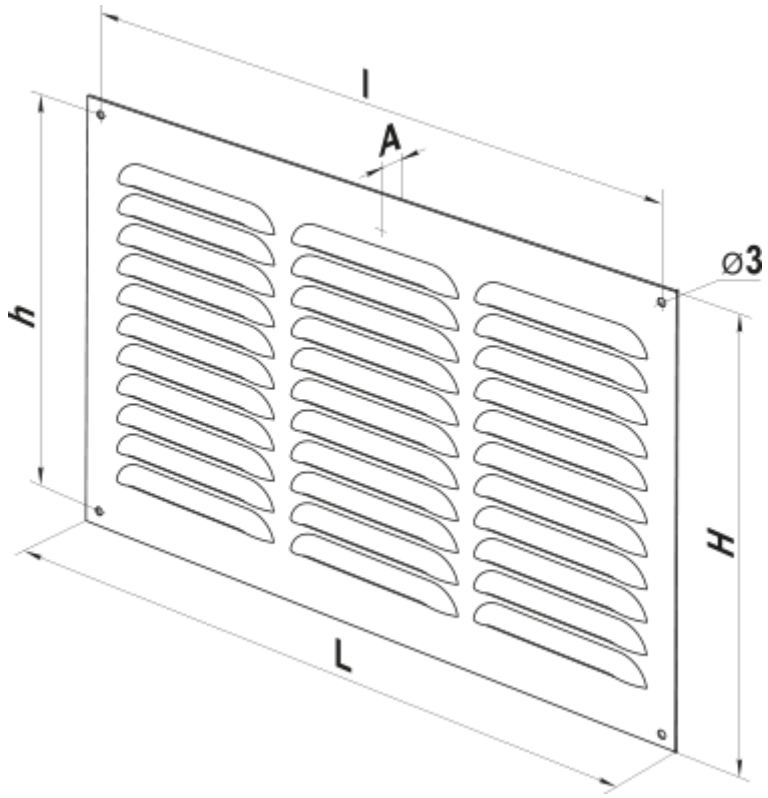
l
A
ø3
h
H
L