MVMP 250x170/2



Multiple-row metal grilles with angled louvers, multiple-row

• Casing material: Coated steel

	Unit of measurement	MVMP 250x170/2

Dimensions

L	H	l	h	A
250	170	236	156	0.8

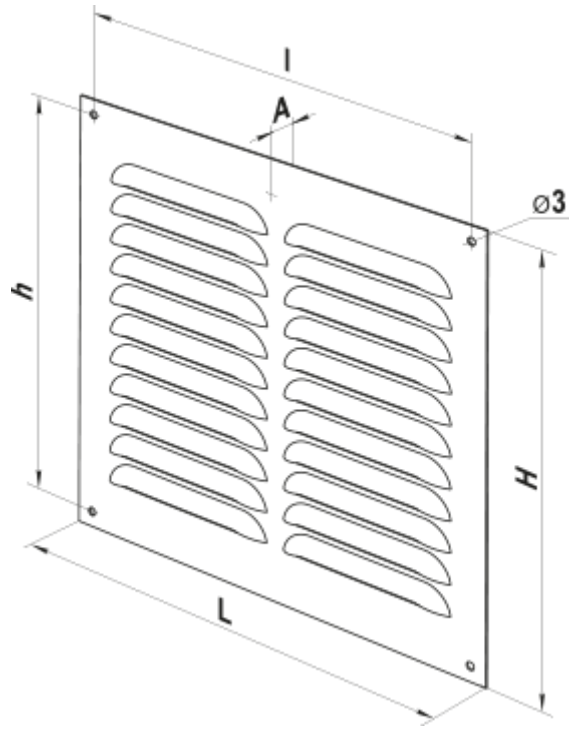
l
A
⌀3
h
H
L