MVMP 240x140/2



Multiple-row metal grilles with angled louvers, multiple-row

• Casing material: Coated steel

	Unit of measurement	MVMP 240x140/2

Dimensions

L	H	l	h	A
240	140	226	126	0.8

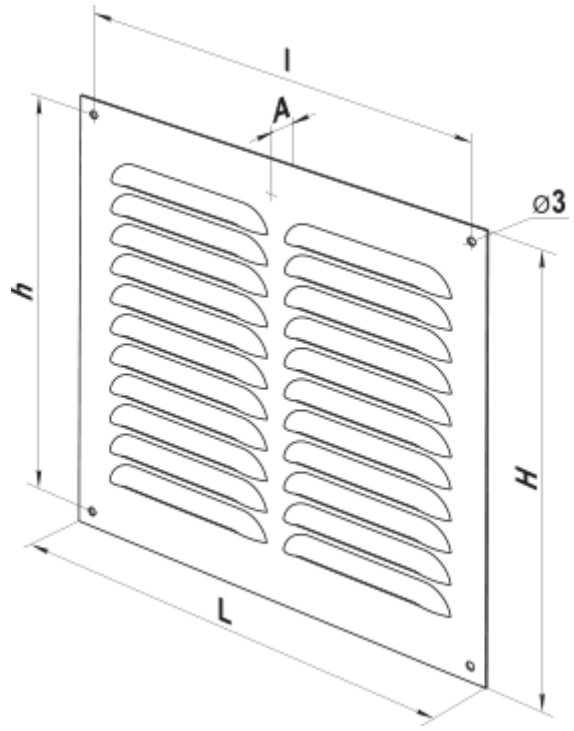
l
A
⌀3
h
H
L